HITACHI
Inspire the Next

WJ200 Series Inverter Quick Reference Guide

- Single-phase Input 200V class
- Three-phase Input 200V class
- Three-phase Input 400V class

Manual Number: NT3251X
May 2010

Refer to the user manual for detail

Hitachi Industrial Equipment Systems Co., Ltd.

UL® Cautions, Warnings and Instructions

Warnings and Cautions for Troubleshooting and Maintenance

The warnings and instructions in this section summarizes the procedures necessary to ensure an inverter installation complies with Underwriters Laboratories® guidelines.

WARNING: Use 60/75°C Cu wire only. (for models: WJ200-001L, 002L, 004L, 007L, 015S, 022S, 004H, 007H, 015H, 022H, 030H)

WARNING: Use 75°C Cu wire only. (for models: WJ200-001S, -002S, -004S, -007S, -015L, -022L, -037L, -055L, -075L, -110L, -150L, -040H, -055H, -075H, -110H and -150H)

WARNING: Suitable for use on a circuit capable of delivering not more than 100,000 rms Symmetrical Amperes, 240 or 480V maximum.

WARNING: When protected by CC, G, J, or R class Fuses, or when Protected By A Circuit Breaker Having An Interrupting Rating Not Less Than 100,000 rms Symmetrical Amperes, 240 or 480 Volts Maximum.

WARNING: Install device in pollution degree 2 environment.

WARNING: Maximum Surrounding Air Temperature 50°C

WARNING: Solid state motor overload protection is provided in each model

WARNING: Integral solid state short circuit protection does not provide branch circuit protection. Branch circuit protection must be provided in accordance with the National Electric Code and any additional local codes

Terminal symbols and Screw size

Inverter Model	Screw Size	Required Torque (N-m)	Wire range
WJ200-001S WJ200-002S WJ200-004S	M3.5	1.0	AWG16 (1.3mm^2)
WJ200-007S	M4	1.4	AWG12 (3.3mm^2)
WJ200-015S WJ200-022S	M4	1.4	AWG10 (5.3mm^2)
WJ200-001L WJ200-002L WJ200-004L WJ200-007L	M3.5	1.0	AWG16 (1.3mm^2)
WJ200-015L	M4	1.4	AWG14 (2.1mm^2)
WJ200-022L	M4	1.4	AWG12 (3.3mm^2)
WJ200-037L	M4	1.4	AWG10 (5.3mm^2)
WJ200-055L WJ200-075L	M5	3.0	AWG6 (13mm^2)
WJ200-110L	M6	3.9 to 5.1	AWG4 (21mm^2)
WJ200-150L	M8	5.9 to 8.8	AWG2 (34mm^2)
WJ200-004H WJ200-007H WJ200-015H	M4	1.4	AWG16 (1.3mm^2)
WJ200-022H WJ200-030H	M4	1.4	AWG14 (2.1mm^2)
WJ200-040H	M4	1.4	AWG12 (3.3mm^2)
WJ200-055H WJ200-075H	M5	3.0	AWG10 (5.3mm^2)
WJ200-110H WJ200-150H	M6	3.9 to 5.1	AWG6 (13mm^2)

Fuse Sizes

The inverter shall be connected with a UL Listed Cartridge Nonrenewable fuse, rated 600Vac with the current ratings as shown in the table below.

Inverter Model	Type	Rating
WJ200-001S WJ200-002S WJ200-004S	Class J	10A, AIC 200kA
WJ200-007S		15A, AIC 200kA
WJ200-015S WJ200-022S		30A, AIC 200kA
WJ200-001L WJ200-002L WJ200-004L		10A, AIC 200kA
WJ200-007L WJ200-015L		15A, AIC 200kA
WJ200-022L		20A, AIC 200kA
WJ200-037L		30A, AIC 200kA
WJ200-055L WJ200-075L		40A, AIC 200kA
WJ200-110L WJ200-150L		80A, AIC 200kA
WJ200-004H WJ200-007H WJ200-015H WJ200-022H		10A, AIC 200kA
WJ200-030H WJ200-040H		15A, AIC 200kA
WJ200-055H WJ200-075H		20A, AIC 200kA
WJ200-110H WJ200-150H		40A, AIC 200kA

Inverter Specification Label

The Hitachi WJ200 inverters have product labels located on the right side of the housing, as pictured below. Be sure to verify that the specifications on the labels match your power source, and application safety requirements.

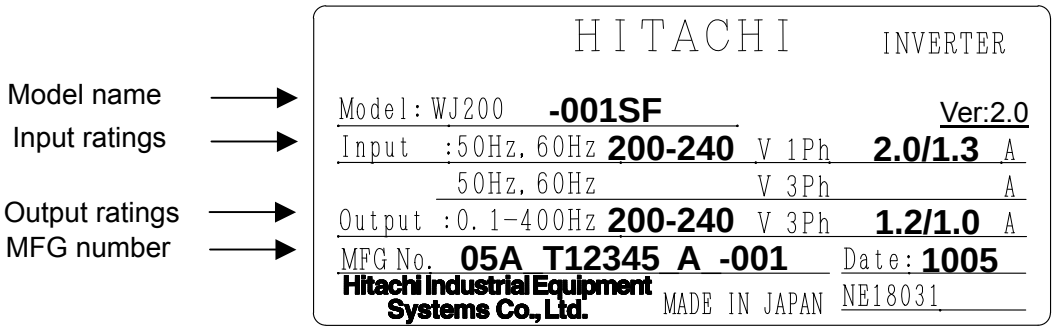

Inverter Specification Label

The model number for a specific inverter contains useful information about its operating characteristics. Refer to the model number legend below:

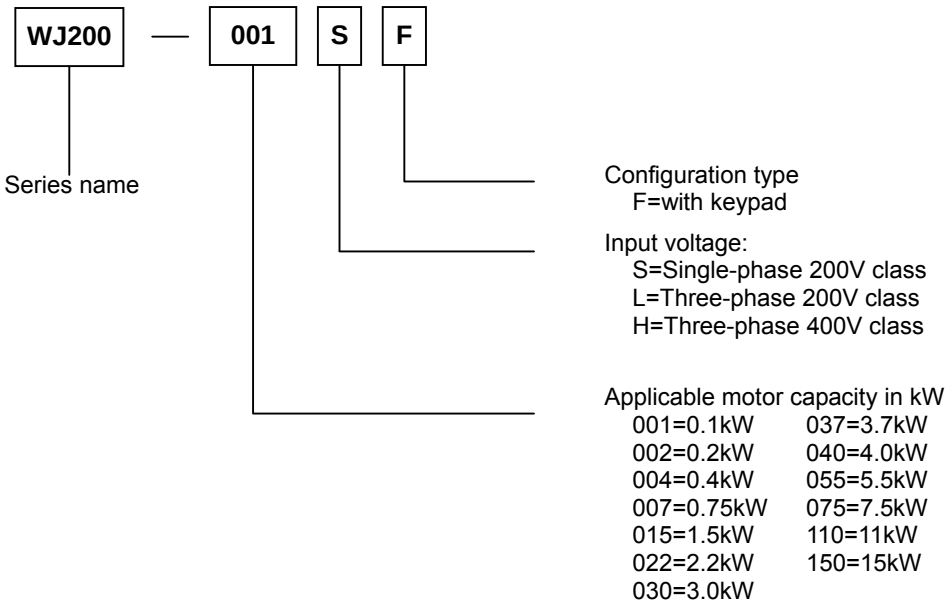

WJ200 Inverter Specifications

Model-specific tables for 200V and 400V class inverters

The following tables are specific to WJ200 inverters for the 200V and 400V class model groups. Note that "General Specifications" on page in this chapter apply to both voltage class groups. Footnotes for all specification tables follow the table below.

Item			Single-phase 200V class Specifications					
WJ200 inverters, 200V models			001SF	002SF	004SF	007SF	015SF	022SF
Applicable motor size *2	kW	VT	0.2	0.4	0.55	1.1	2.2	3.0
		CT	0.1	0.2	0.4	0.75	1.5	2.2
	HP	VT	**1/4**	**1/2**	**3/4**	**1.5**	**3**	**4**
		CT	**1/8**	**1/4**	**1/2**	**1**	**2**	**3**
Rated capacity (kVA)	200V	VT	0.4	0.6	1.2	2.0	3.3	4.1
		CT	0.2	0.5	1.0	1.7	2.7	3.8
	240V	VT	0.4	0.7	1.4	2.4	3.9	4.9
		CT	0.3	0.6	1.2	2.0	3.3	4.5
Rated input voltage			Single-phase: 200V-15% to 240V +10%, 50/60Hz ±5%					
Rated output voltage *3			3-phase: 200 to 240V (proportional to input voltage)					
Rated output current (A)		VT	1.2	1.9	3.5	6.0	9.6	12.0
		CT	1.0	1.6	3.0	5.0	8.0	11.0
Starting torque *6			200% at 0.5Hz					
Braking	Without resistor		100%: ≤ 50Hz 50%: ≤ 60Hz				70%: ≤ 50Hz 50%: ≤ 60Hz	20%: ≤ 50Hz 20%: ≤ 60Hz
	With resistor		150%					100%
DC braking			Variable operating frequency, time, and braking force					
Weight		kg	1.0	1.0	1.1	1.6	1.8	1.8
		lb	2.2	2.2	2.4	3.5	4.0	4.0

WJ200 Inverter Specifications, continued…

Item			Three-phase 200V class Specifications					
WJ200 inverters, 200V models			001LF	002LF	004LF	007LF	015LF	022LF
Applicable motor size *2	kW	VT	0.2	0.4	0.75	1.1	2.2	3.0
		CT	0.1	0.2	0.4	0.75	1.5	2.2
	HP	VT	**1/4**	**1/2**	**1**	**1.5**	**3**	**4**
		CT	**1/8**	**1/4**	**1/2**	**1**	**2**	**3**
Rated capacity (kVA)	200V	VT	0.4	0.6	1.2	2.0	3.3	4.1
		CT	0.2	0.5	1.0	1.7	2.7	3.8
	240V	VT	0.4	0.7	1.4	2.4	3.9	4.9
		CT	0.3	0.6	1.2	2.0	3.3	4.5
Rated input voltage			Three-phase: 200V-15% to 240V +10%, 50/60Hz ±5%					
Rated output voltage *3			Three-phase: 200 to 240V (proportional to input voltage)					
Rated output current (A)		VT	1.2	1.9	3.5	6.0	9.6	12.0
		CT	1.0	1.6	3.0	5.0	8.0	11.0
Starting torque *6			200% at 0.5Hz					
Braking	Without resistor		100%: ≤ 50Hz 50%: ≤ 60Hz				70%: ≤ 50Hz 50%: ≤ 60Hz	20%: ≤ 50Hz 20%: ≤ 60Hz
	With resistor		150%					100%
DC braking			Variable operating frequency, time, and braking force					
Weight		kg	1.0	1.0	1.1	1.2	1.6	1.8
		lb	2.2	2.2	2.4	2.6	3.5	4.0

Item			Three-phase 200V class Specifications					
WJ200 inverters, 200V models			037LF	055LF	075LF	110LF	150LF	
Applicable motor size *2	kW	VT	5.5	7.5	11	15	18.5	
		CT	3.7	5.5	7.5	11	15	
	HP	VT	**7.5**	**10**	**15**	**20**	**25**	
		CT	**5**	**7.5**	**10**	**15**	**20**	
Rated capacity (kVA)	200V	VT	6.7	10.3	13.8	19.3	20.7	
		CT	6.0	8.6	11.4	16.2	20.7	
	240V	VT	8.1	12.4	16.6	23.2	24.9	
		CT	7.2	10.3	13.7	19.5	24.9	
Rated input voltage			Single-phase: 200V-15% to 240V +10%, 50/60Hz ±5%					
Rated output voltage *3			3-phase: 200 to 240V (proportional to input voltage)					
Rated output current (A)		VT	19.6	30.0	40.0	56.0	69.0	
		CT	17.5	25.0	33.0	47.0	60.0	
Starting torque *6			200% at 0.5Hz					
Braking	Without resistor		100%: ≤ 50Hz 50%: ≤ 60Hz				70%: ≤ 50Hz 50%: ≤ 60Hz	
	With resistor		150%					
DC braking			Variable operating frequency, time, and braking force					
Weight		Kg	2.0	3.3	3.4	5.1	7.4	
		lb	4.4	7.3	7.5	11.2	16.3	

WJ200 Inverter Specifications, continued…

Item			Three-phase 400V class Specifications					
WJ200 inverters, 400V models			004HF	007HF	015HF	022HF	030HF	040HF
Applicable motor size *2	kW	VT	0.75	1.5	2.2	3.0	4.0	5.5
		CT	0.4	0.75	1.5	2.2	3.0	4.0
	HP	VT	1	2	3	4	5	7.5
		CT	1/2	1	2	3	4	5
Rated capacity (kVA)	380V	VT	1.3	2.6	3.5	4.5	5.7	7.3
		CT	1.1	2.2	3.1	3.6	4.7	6.0
	480V	VT	1.7	3.4	4.4	5.7	7.3	9.2
		CT	1.4	2.8	3.9	4.5	5.9	7.6
Rated input voltage			Three-phase: 200V-15% to 240V +10%, 50/60Hz ±5%					
Rated output voltage *3			Three-phase: 200 to 240V (proportional to input voltage)					
Rated output current (A)		VT	2.1	4.1	5.4	6.9	8.8	11.1
		CT	1.8	3.4	4.8	5.5	7.2	9.2
Starting torque *6			200% at 0.5Hz					
Braking	Without resistor		100%: ≤ 50Hz 50%: ≤ 60Hz				70%: ≤ 50Hz 50%: ≤ 60Hz	
	With resistor		150%					
DC braking			Variable operating frequency, time, and braking force					
Weight		kg	1.5	1.6	1.8	1.9	1.9	2.1
		lb	3.3	3.5	4.0	4.2	4.2	4.6

Item			Three-phase 400V class Specifications					
WJ200 inverters, 400V models			055HF	075HF	110HF	150HF		
Applicable motor size *2	kW	VT	7.5	11	15	18.5		
		CT	5.5	7.5	11	15		
	HP	VT	10	15	20	25		
		CT	7.5	10	15	20		
Rated capacity (kVA)	380V	VT	11.5	15.1	20.4	25.0		
		CT	9.7	11.8	15.7	20.4		
	480V	VT	14.5	19.1	25.7	31.5		
		CT	12.3	14.9	19.9	25.7		
Rated input voltage			Single-phase: 200V-15% to 240V +10%, 50/60Hz ±5%					
Rated output voltage *3			3-phase: 200 to 240V (proportional to input voltage)					
Rated output current (A)		VT	17.5	23.0	31.0	38.0		
		CT	14.8	18.0	24.0	31.0		
Starting torque *6			200% at 0.5Hz					
Braking	Without resistor		100%: ≤ 50Hz 50%: ≤ 60Hz					
	With resistor		150%					
DC braking			Variable operating frequency, time, and braking force					
Weight		kg	3.5	3.5	4.7	5.2		
		lb	7.7	7.7	10.4	11.5		

The following table shows which models need derating.

1-ph 200V class	Need derating	3-ph 200V class	Need derating	3-ph 400V class	Need derating
WJ200-001S	–	WJ200-001L	–	WJ200-004H	✓
WJ200-002S	–	WJ200-002L	✓	WJ200-007H	✓
WJ200-004S	✓	WJ200-004L	✓	WJ200-015H	–
WJ200-007S	✓	WJ200-007L	–	WJ200-022H	–
WJ200-015S	–	WJ200-015L	–	WJ200-030H	–
WJ200-022S	–	WJ200-022L	–	WJ200-040H	✓
–	–	WJ200-037L	✓	WJ200-055H	–
–	–	WJ200-055L	–	WJ200-075H	✓
–	–	WJ200-075L	✓	WJ200-110H	✓
–	–	WJ200-110L	✓	WJ200-150H	✓
–	–	WJ200-150L	✓	–	–

✓ : need derating
– : need no derating

Use the following derating curves to help determine the optimal carrier frequency setting for your inverter and find the output current derating. Be sure to use the proper curve for your particular WJ200 inverter model number.

Basic System Description

A motor control system will obviously include a motor and inverter, as well as a circuit breaker or fuses for safety. If you are connecting a motor to the inverter on a test bench just to get started, that's all you may need for now. But a system can also have a variety of additional components. Some can be for noise suppression, while others may enhance the inverter's braking performance. The figure and table below show a system with all the **optional** components you might need in your finished application.

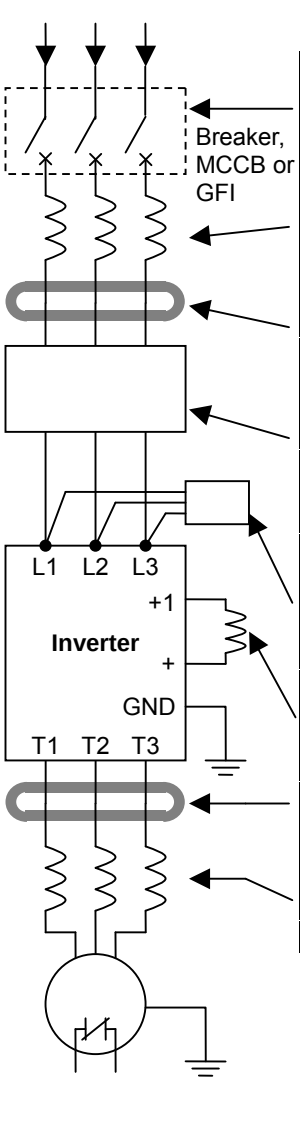

Name	Function
Breaker / disconnect	A molded-case circuit breaker (MCCB), ground fault interrupter (GFI), or a fused disconnect device. NOTE: The installer must refer to the NEC and local codes to ensure safety and compliance.
Input-side AC Reactor	This is useful in suppressing harmonics induced on the power supply lines and for improving the power factor. **WARNING:** Some applications *must* use an input-side AC Reactor to prevent inverter damage. See Warning on next page.
Radio noise filter	Electrical noise interference may occur on nearby equipment such as a radio receiver. This magnetic choke filter helps reduce radiated noise (can also be used on output).
EMC filter (for CE applications, see Appendix D)	Reduces the conducted noise on the power supply wiring between the inverter and the power distribution system. Connect to the inverter primary (input) side.
Radio noise filter (use in non-CE applications)	This capacitive filter reduces radiated noise from the main power wires in the inverter input side.
DC link choke	Suppress harmonics generated by the inverter. However, it will not protect the input diode bridge rectifier.
Radio noise filter	Electrical noise interference may occur on nearby equipment such as a radio receiver. This magnetic choke filter helps reduce radiated noise (can also be used on input).
Output-side AC Reactor	This reactor reduces the vibration in the motor caused by the inverter's switching waveforms, by smoothing the waveform to approximate commercial power quality. It is also useful to reduce harmonics when wiring from the inverter to the motor is more than 10m in length.
LCR filter	Sine wave shaping filter for output side.

Determining Wire and Fuse Sizes

The maximum motor currents in your application determines the recommended wore size. The following table gives the wire size in AWG. The “Power Lines” column applies to the inverter input power, output wires to the motor, the earth ground connection, and any other components shown in the “Basic System Description” on page 2-7. The “Signal Lines” column applies to any wire connecting to the two green connectors just inside the front cover panel.

Motor Output				Inverter Model	Wiring		Applicable equipment
kW		HP			Power Lines	Signal Lines	Fuse (UL-rated, class J, 600V , Maximum allowable current)
VT	CT	VT	CT				
0.2	0.1	¼	1/8	WJ200-001SF	AWG16 / 1.3mm^2 (75°C only)	18 to 28 AWG / 0.14 to 0.75 mm^2 shielded wire (see Note 4)	10A
0.4	0.2	½	¼	WJ200-002SF			
0.55	0.4	¾	½	WJ200-004SF			
1.1	0.75	1.5	1	WJ200-007SF	AWG12 / 3.3mm^2 (75°C only)		20A
2.2	1.5	3	2	WJ200-015SF	AWG10 / 5.3mm^2		30A
3.0	2.2	4	3	WJ200-022SF			
0.2	0.1	¼	1/8	WJ200-001LF	AWG16 / 1.3mm^2		10A
0.4	0.2	½	¼	WJ200-002LF			
0.75	0.4	1	½	WJ200-004LF			
1.1	0.75	1.5	1	WJ200-007LF			15A
2.2	1.5	3	2	WJ200-015LF	AWG14 / 2.1mm^2 (75°C only)		
3.0	2.2	4	3	WJ200-022LF	AWG12 / 3.3mm^2 (75°C only)		20A
5.5	3.7	7.5	5	WJ200-037LF	AWG10 / 5.3mm^2 (75°C only)		30A
7.5	5.5	10	7.5	WJ200-055LF	AWG6 / 13mm^2 (75°C only)		60A
11	7.5	15	10	WJ200-075LF			
15	11	20	15	WJ200-110LF	AWG4 / 21mm^2 (75°C only)		80A
18.5	15	25	20	WJ200-150LF	AWG2 / 34mm^2 (75°C only)		80A
0.75	0.4	1	½	WJ200-004HF	AWG16 / 1.3mm^2		10A
1.5	0.75	2	1	WJ200-007HF			
2.2	1.5	3	2	WJ200-015HF			
3.0	2.2	4	3	WJ200-022HF	AWG14 / 2.1mm^2		
4.0	3.0	5	4	WJ200-030HF			15A
5.5	4.0	7.5	5	WJ200-040HF	AWG12 / 3.3mm^2 (75°C only)		
7.5	5.5	10	7.5	WJ200-055HF	AWG10/ 5.3mm^2 (75°C only)		30A
11	7.5	15	10	WJ200-075HF			
15	11	20	15	WJ200-110HF	AWG6 / 13mm^2 (75°C only)		50A
18.5	15	25	20	WJ200-150HF	AWG6 / 13mm^2 (75°C only)		50A

Note 1: Field wiring must be made by a UL-Listed and CSA-certified closed-loop terminal connector sized for the wire gauge involved. Connector must be fixed by using the crimping tool specified by the connector manufacturer.
Note 2: Be sure to consider the capacity of the circuit breaker to be used.
Note 3: Be sure to use a larger wire gauge if power line length exceeds 66ft. (20m).
Note 4: Use 18 AWG / 0.75mm^2 wire for the alarm signal wire ([AL0], [AL1], [AL2] terminals).

Wire the Inverter Input to a Supply

6 **Step 6:** In this step, you will connect wiring to the input of the inverter. First, you must determine whether the inverter model you have required three-phase power only, or single-phase power only. All models have the same power connection terminals **[R/L1], [S/L2], and [T/L3]. So you must refer to the specifications label (on the side of the inverter) for the acceptable power source types! For inverters that can accept single-phase power and are connected that way, terminal [S/L2] will remain unconnected.**
Note the use of ring lug connectors for a secure connection.

Single-phase 200V 0.1 to 0.4kW
Three-phase 200V 0.1 to 0.75kW

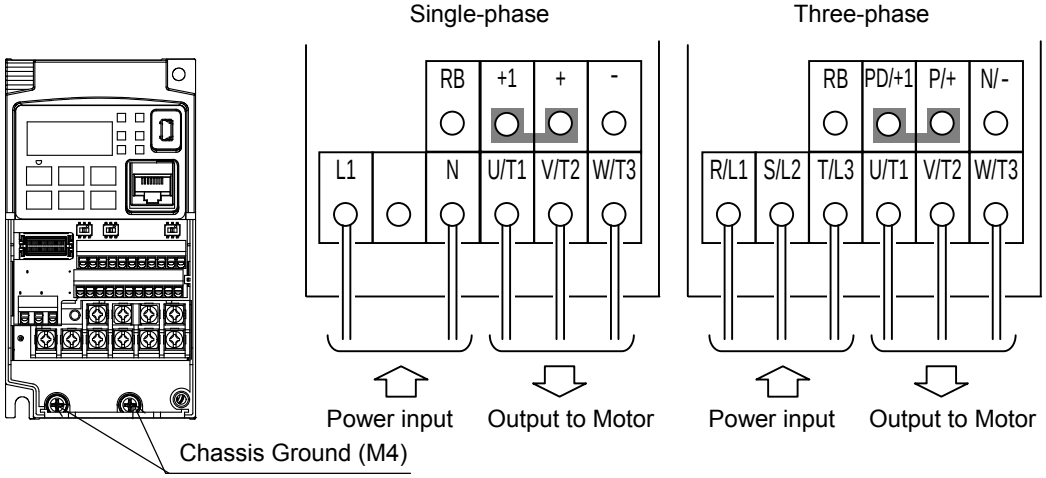

Single-phase 200V 0.75 to 2.2kW
Three-phase 200V 1.5, 2.2kW
Three-phase 400V 0.4 to 3.0kW

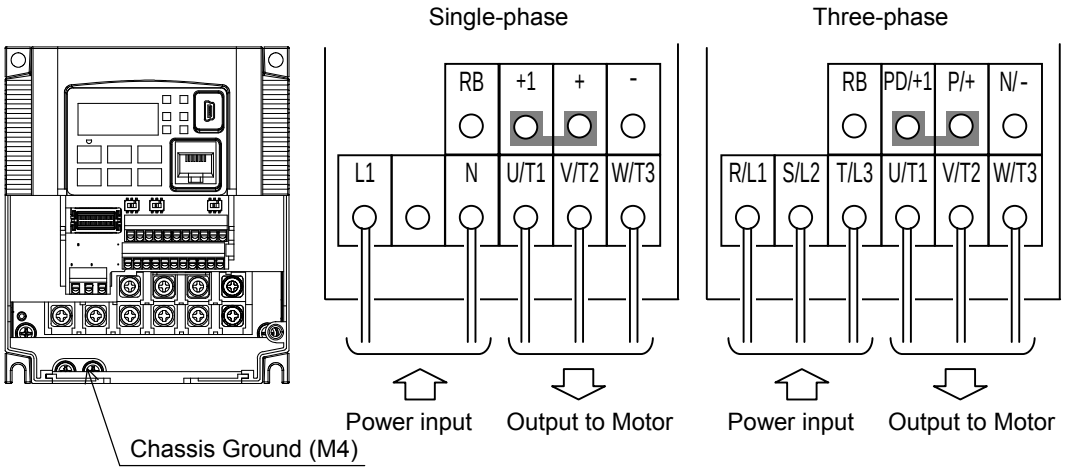

Three-phase 200V 3.7kW
Three-phase 400V 4.0kW

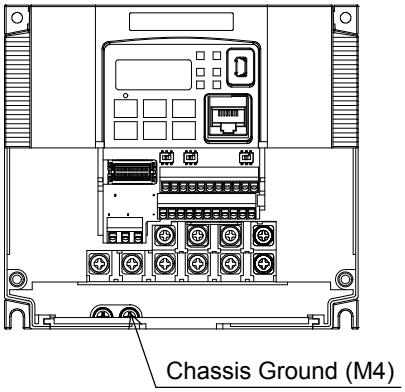

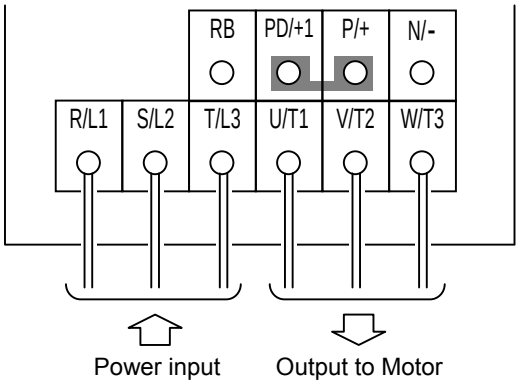

Three-phase 200V 5.5, 7.5kW
Three-phase 400V 5.5, 7.5kW

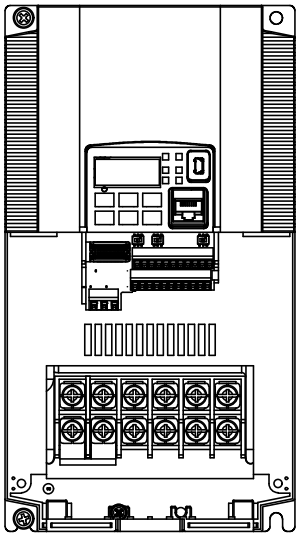

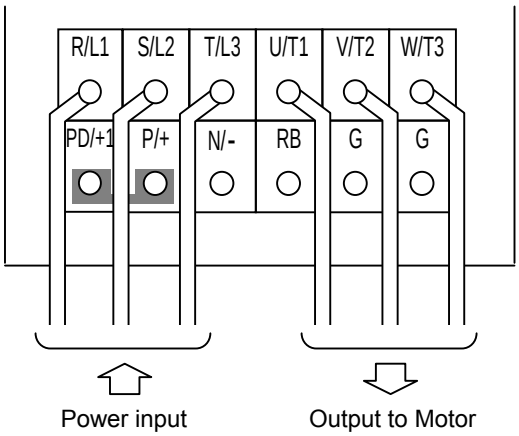

Three-phase 200V 11kW
Three-phase 400V 11, 15kW

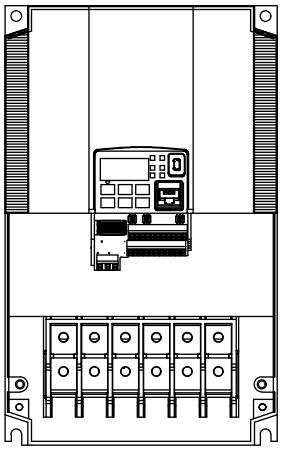

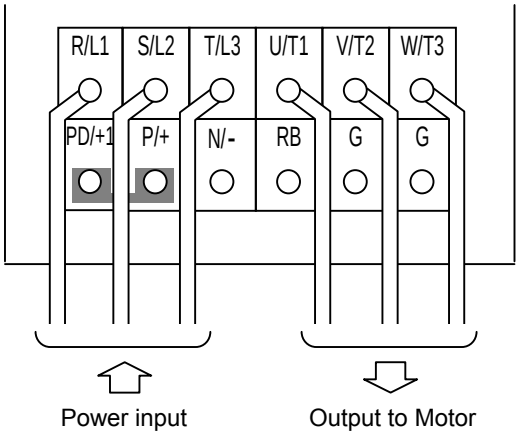

Three-phase 200V 15kW

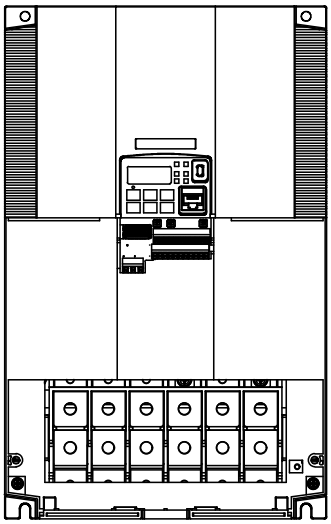

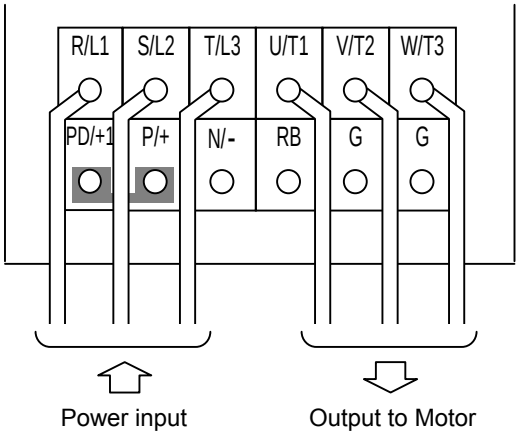

NOTE: An inverter powered by a portable power generator may receive a distorted power waveform, overheating the generator. In general, the generator capacity should be five times that of the inverter (kVA).

Using the Front Panel Keypad

Please take a moment to familiarize yourself with the keypad layout shown in the figure below. The display is used in programming the inverter's parameters, as well as monitoring specific parameter values during operation.

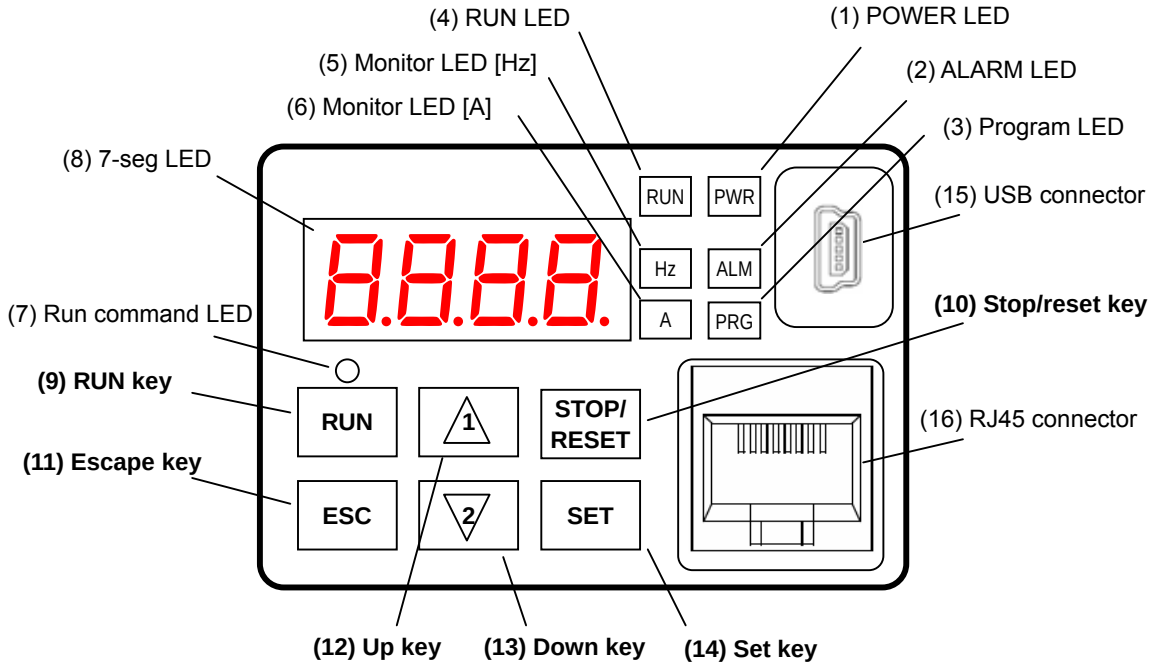

Key and Indicator Legend

Items	Contents
(1) POWER LED	Turns ON (Green) while the inverter is powered up.
(2) ALARM LED	Turns ON (Red) when the inverter trips.
(3) Program LED	➢ Turns ON (Green) when the display shows changeable parameter. ➢ Blinks when there is a mismatch in setting.
(4) RUN LED	Turns ON (Green) when the inverter is driving the motor.
(5) Monitor LED [Hz]	Turns ON (Green) when the displayed data is frequency related.
(6) Monitor LED [A]	Turns ON (Green) when the displayed data is current related.
(7) Run command LED	Turns ON (Green) when a Run command is set to the operator. (Run key is effective.)
(8) 7-seg LED	Shows each parameter, monitors etc.
(9) Run key	Makes inverter run.
(10) Stop/reset key	➢ Makes inverter decelerates to a stop. ➢ Reset the inverter when it is in trip situation
(11) ESC key	➢ Go to the top of next function group, when a function mode is shown ➢ Cancel the setting and return to the function code, when a data is shown ➢ Moves the cursor to a digit left, when it is in digit-to-digit setting mode ➢ Pressing for 1 second leads to display data of d001, regardless of current display.
(12) Up key **(13) Down key**	➢ Increase or decrease the data. ➢ Pressing the both keys at the same time gives you the digit-to-digit edit.
(14) SET key	➢ Go to the data display mode when a function code is shown ➢ Stores the data and go back to show the function code, when data is shown. ➢ Moves the cursor to a digit right, when it is in digit-to-digit display mode
(15) USB connector	Connect USB connector (mini-B) for using PC communication
(16) RJ45 connector	Connect RJ45 jack for remote operator

Keys, Modes, and Parameters

The purpose of the keypad is to provide a way to change modes and parameters. The term *function* applies to both monitoring modes and parameters. These are all accessible through *function codes* that are primary 4-character codes. The various functions are separated into related groups identifiable by the left-most character, as the table shows.

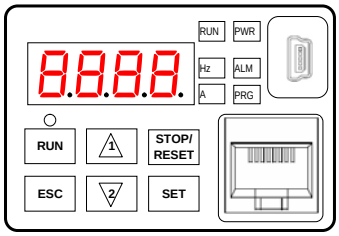

Function Group	Type (Category) of Function	Mode to Access	PRG LED Indicator
"D"	Monitoring functions	Monitor	❍
"F"	Main profile parameters	Program	●
"A"	Standard functions	Program	●
"B"	Fine tuning functions	Program	●
"C"	Intelligent terminal functions	Program	●
"H"	Motor constant related functions	Program	●
"P"	Pulse train input, torque, EzSQ, and communication related functions	Program	●
"U"	User selected parameters	Program	●
"E"	Error codes	–	–

You can see from the following page how to monitor and/or program the parameters.

Keypad Navigation Map

The WJ200 Series inverter drives have many programmable functions and parameters. Chapter 3 will cover these in detail, but you need to access just a few items to perform the powerup test. The menu structure makes use of function codes and parameter codes to allow programming and monitoring with only a 4-digit display and keys and LEDs. So, it is important to become familiar with the basic navigation map of parameters and functions in the diagram below. You may later use this map as a reference.

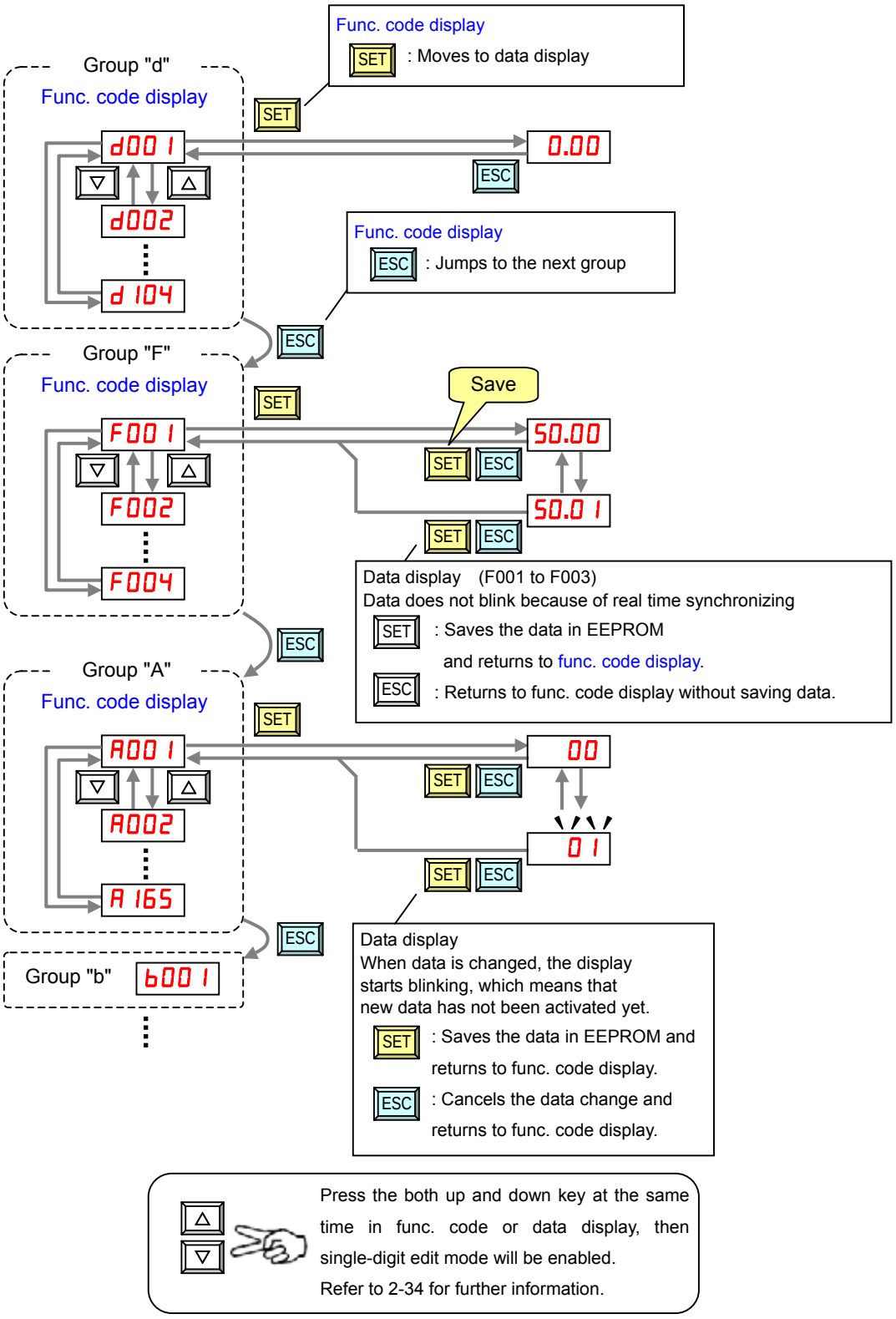

Press the both up and down key at the same time in func. code or data display, then single-digit edit mode will be enabled.
Refer to 2-34 for further information.

NOTE: Pressing the [ESC] key will make the display go to the top of next function group, regardless the display contents. (e.g. A021 → [ESC] → b001)

[Setting example]

After power ON, changing from 0.00 display to change the b083 (carrier frequency) data.

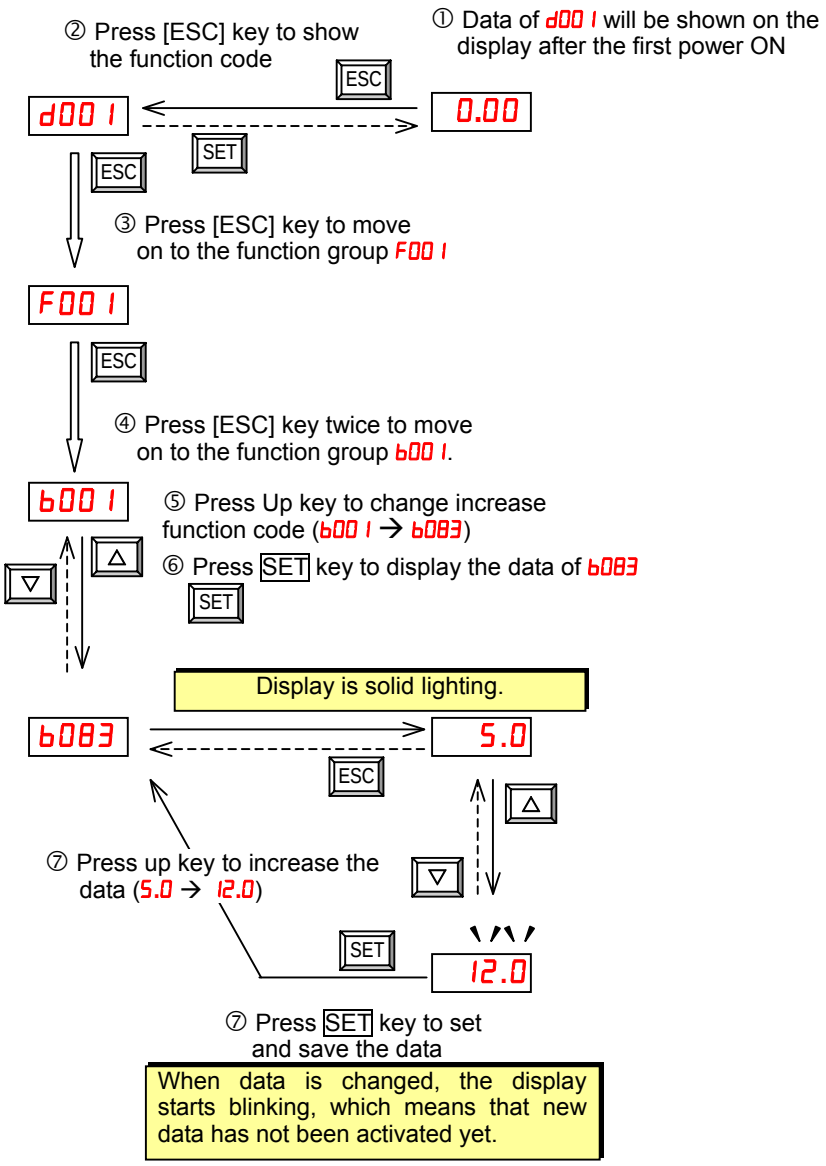

SET :Fix and stores the data and moves back to the function code

ESC :Cancels the change and moves back to the function code

Function code dxxx are for monitor and not possible to change.
Function codes Fxxx other than F004 are reflected on the performance just after changing the data (before pressing SET key), and there will be no blinking.

	When a function code is shown…	When a data is shown…
ESC key	Move on to the next function group	Cancels the change and moves back to the function code
SET key	Move on to the data display	Fix and stores the data and moves back to the function code
△ key	Increase function code	Increase data value
▽ key	Decrease function code	Decrease data value

📖 Note
Keep pressing for more than 1 second leads to d001 display, regardless the display situation. But note that the display will circulates while keep pressing the [ESC] key because of the original function of the key.
(e.g. F001 → A001 → b001 → C001 → …→ displays 50.00 after 1 second)

Connecting to PLCs and Other Devices

Hitachi inverters (drives) are useful in many types of applications. During installation, the inverter keypad (or other programming device) will facilitate the initial configuration. After installation, the inverter will generally receive its control commands through the control logic connector or serial interface from another controlling device. In a simple application such as single-conveyor speed control, a Run/Stop switch and potentiometer will give the operator all the required control. In a sophisticated application, you may have a *programmable logic controller* (PLC) as the system controller, with several connections to the inverter.

It is not possible to cover all the possible types of application in this manual. It will be necessary for you to know the electrical characteristics of the devices you want to connect to the inverter. Then, this section and the following sections on I/O terminal functions can help you quickly and safely connect those devices to the inverter.

CAUTION: It is possible to damage the inverter or other devices if your application exceeds the maximum current or voltage characteristics of a connection point.

The connections between the inverter and other devices rely on the electrical input/output characteristics at both ends of each connection, shown in the diagram to the right. The inverter's configurable inputs accept either a sourcing or sinking output from an external device (such as PLC). This chapter shows the inverter's internal electrical component(s) at each I/O terminal. In some cases, you will need to insert a power source in the interface wiring.

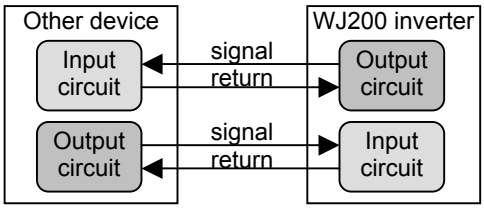

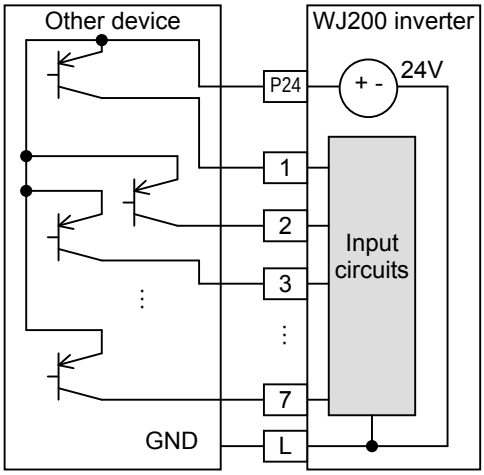

In order to avoid equipment damage and get your application running smoothly, we recommend drawing a schematic of each connection between the inverter and the other device. Include the internal components of each device in the schematic, so that it makes a complete circuit loop.

After making the schematic, then:

1. Verify that the current and voltage for each connection is within the operating limits of each device.
2. Make sure that the logic sense (active high or active low) of any ON/OFF connection is correct.
3. Check the zero and span (curve end points) for analog connections, and be sure the scale factor from input to output is correct.
4. Understand what will happen at the system level if any particular device suddenly loses power, or powers up after other devices.

Example Wiring Diagram

The schematic diagram below provides a general example of logic connector wiring, in addition to basic power and motor wiring converted in Chapter 2. The goal of this chapter is to help you determine the proper connections for the various terminals shown below for your application needs.

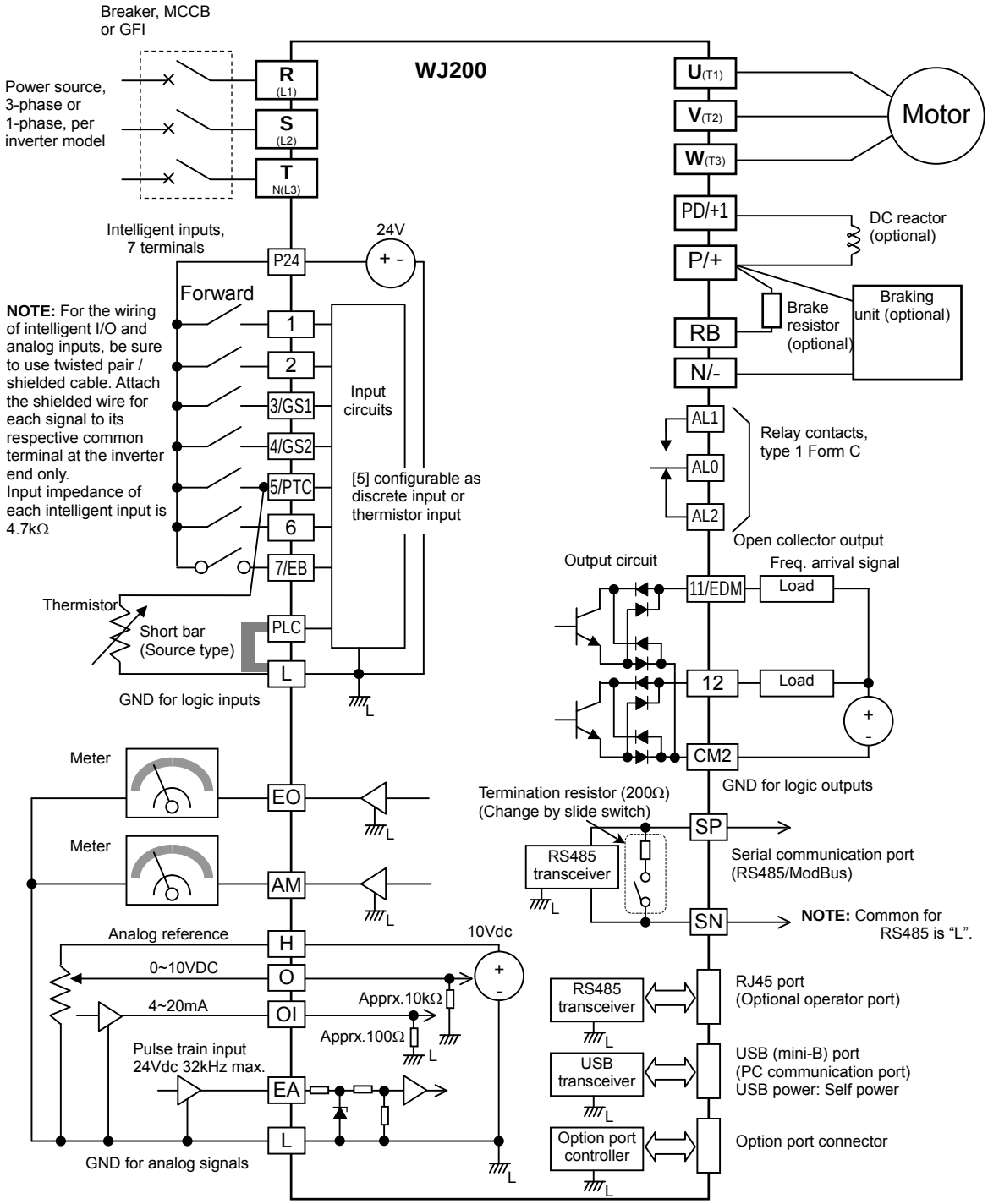

Control Logic Signal Specifications

The control logic connectors are located just behind the front housing cover. The relay contacts are just to the left of the logic connectors. Connector labeling is shown below.

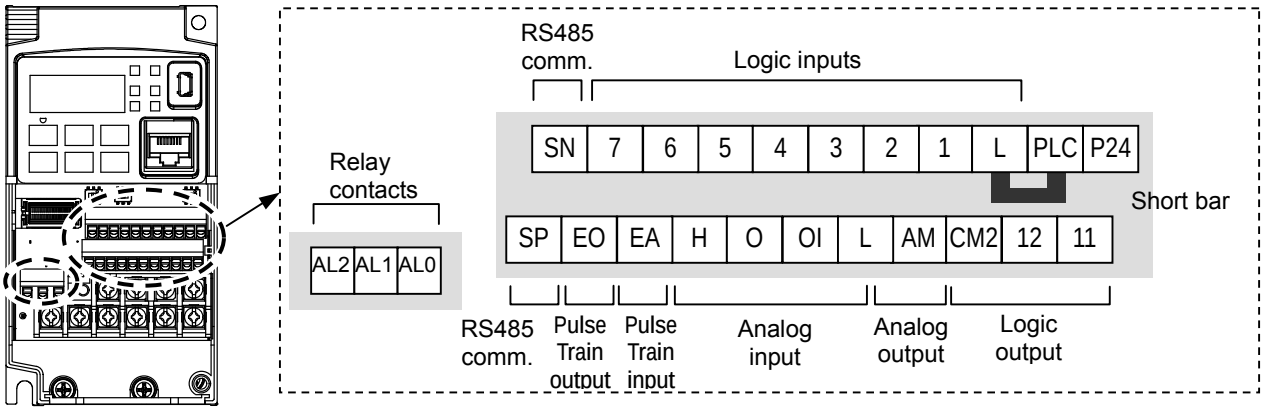

Terminal Name	Description	Ratings
P24	+24V for logic inputs	24VDC, 100mA. (do not short to terminal L)
PLC	Intelligent input common	Factory set: Source type for –FE and –FU models (connecting [P24] to [1]~[7] turns each input ON). To change to sink type, remove the short bar between [PLC] and [L], and connect it between [P24] and [L]. In this case, connecting [L] to [1]~[7] makes each input ON.
1 2 3/GS1 4/GS2 5/PTC 6 7/EB	Discrete logic inputs (Terminal [3],[4],[5] and [7] have dual function. See following description and related pages for the details.)	27VDC max. (use PLC or an external supply referenced to terminal L)
GS1(3)	Safe stop input GS1	Functionality is based on ISO13849-1 See appendix for the details.
GS2(4)	Safe stop input GS2	
PTC(5)	Motor thermistor input	Connect motor thermistor between PTC and L terminal to detect the motor temperature. Set 19 in C005.
EB(7)	Pulse train input B	2kHz max. Common is [PLC]
EA	Pulse train input A	32kHz max. Common is [L]
L (in upper row) *1	GND for logic inputs	Sum of input [1]~[7] currents (return)
11/EDM	Discrete logic outputs [11] (Terminal [11] has dual function. See following description and related pages for the details.)	50mA max. ON state current, 27 VDC max. OFF state voltage Common is CM2 In case the EDM is selected, the functionality is based on ISO13849-1 4VDC max. ON state voltage depression
12	Discrete logic outputs [12]	50mA max. ON state current, 27 VDC max. OFF state voltage Common is CM2
CM2	GND for logic output	100 mA: [11], [12] current return
AM	Analog voltage output	0~10VDC 2mA maximum
EO	Pulse train output	10VDC 2mA maximum 32kHz maximum
L (in bottom row) *2	GND for analog signals	Sum of [OI], [O], and [H] currents (return)

Terminal Name	Description	Ratings
OI	Analog current input	4 to 19.6 mA range, 20 mA nominal, input impedance 100 Ω
O	Analog voltage input	0 to 9.8 VDC range, 10 VDC nominal, input impedance 10 kΩ
H	+10V analog reference	10VDC nominal, 10mA max.
SP, SN	Serial communication terminal	For RS485 Modbus communication.
AL0, AL1, AL2 *3	Relay common contact	250VAC, 2.5A (R load) max. 250VAC, 0.2A (I load, P.F.=0.4) max. 100VAC, 10mA min. 30VDC, 3.0A (R load) max. 30VDC, 0.7A (I load, P.F.=0.4) max. 5VDC, 100mA min.

Note 1: The two terminals [L] are electrically connected together inside the inverter.
Note 2: We recommend using [L] logic GND (to the right) for logic input circuits and [L] analog GND (to the left) for analog I/O circuits.
Note 3: Refer to page 39 for details of trip signals.

Wiring sample of control logic terminal (source logic)

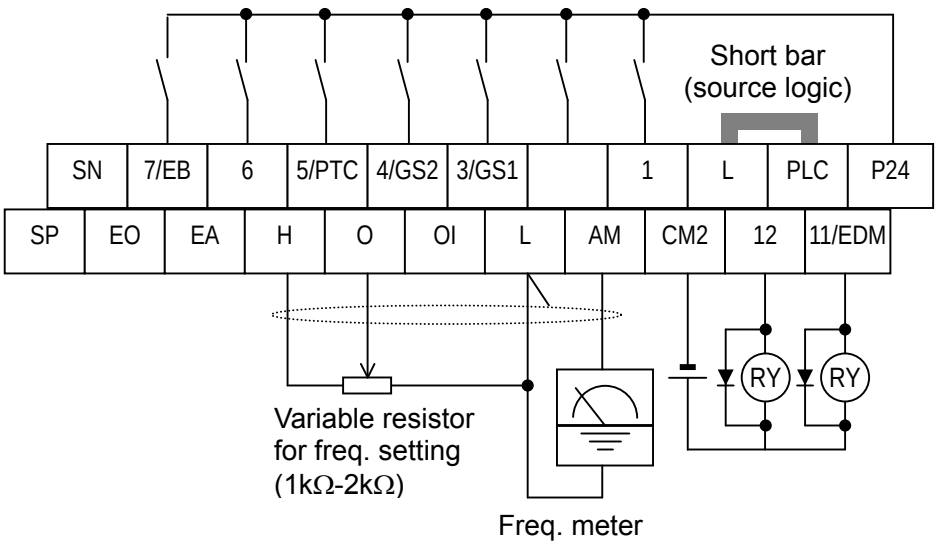

Note: If relay is connected to intelligent output, install a diode across the relay coil (reverse-biased) in order to suppress the turn-off spike.

Sink/source logic of intelligent input terminals

Sink or source logic is switched by a short bar as below.

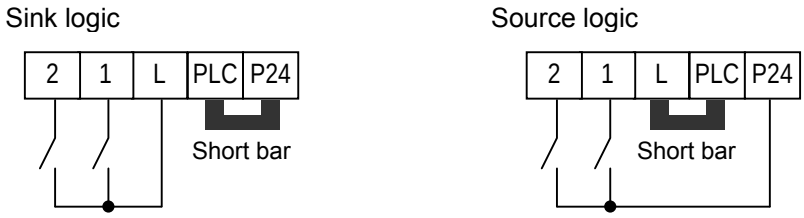

Wire size for control and relay terminals

Use wires within the specifications listed below. For safe wiring and reliability, it is recommended to use ferrules, but if solid or stranded wire is used, stripping length should be 8mm.

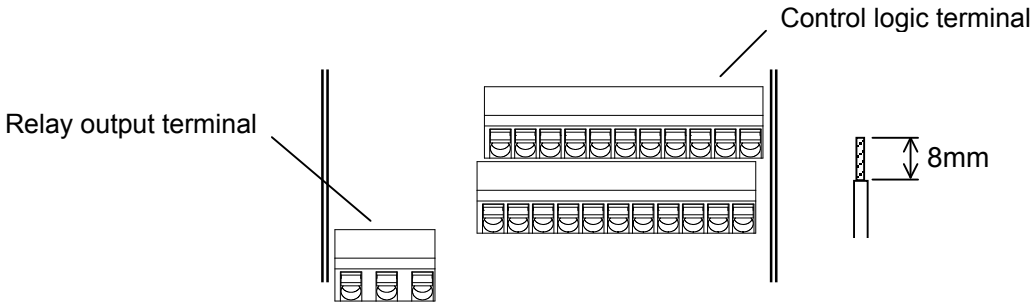

	Solid mm^2 (AWG)	Stranded mm^2 (AWG)	Ferrule mm^2 (AWG)
Control logic terminal	0.2 to 1.5 (AWG 24 to 16)	0.2 to 1.0 (AWG 24 to 17)	0.25 to 0.75 (AWG 24 to 18)
Relay terminal	0.2 to 1.5 (AWG 24 to 16)	0.2 to 1.0 (AWG 24 to 17)	0.25 to 0.75 (AWG 24 to 18)

Recommended ferrule

For safe wiring and reliability, it is recommended to use following ferrules.

Wire size mm^2 (AWG)	Model name of ferrule *	L [mm]	Φd [mm]	ΦD [mm]
0.25 (24)	AI 0.25-8YE	12.5	0.8	2.0
0.34 (22)	AI 0.34-8TQ	12.5	0.8	2.0
0.5 (20)	AI 0.5-8WH	14	1.1	2.5
0.75 (18)	AI 0.75-8GY	14	1.3	2.8

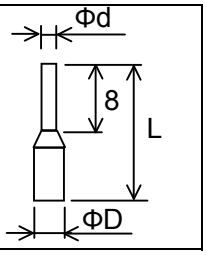

* Supplier: Phoenix contact
Crimping pliers: CRIPMFOX UD 6-4 or CRIMPFOX ZA 3

How to connect?

(1) Push down an orange actuating lever by a slotted screwdriver (width 2.5mm max.).
(2) Plug in the conductor.
(3) Pull out the screwdriver then the conductor is fixed.

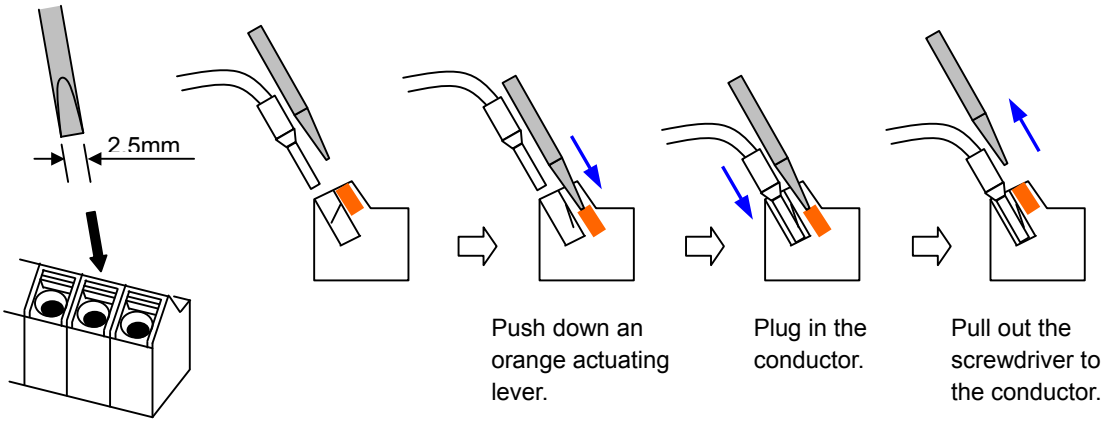

Push down an orange actuating lever.

Plug in the conductor.

Pull out the screwdriver to fix the conductor.

Intelligent Terminal Listing

Intelligent Inputs

Use the following table to locate pages for intelligent input material in this chapter.

Input Function Summary Table			
Symbol	**Code**	**Function Name**	**Page**
FW	00	Forward Run/Stop	
RV	01	Reverse Run/Stop	
CF1	02	Multi-speed Select, Bit 0 (LSB)	
CF2	03	Multi-speed Select, Bit 1	
CF3	04	Multi-speed Select, Bit 2	
CF4	05	Multi-speed Select, Bit 3 (MSB)	
JG	06	Jogging	
DB	07	External DC braking	
SET	08	Set (select) 2nd Motor Data	
2CH	09	2-stage Acceleration and Deceleration	
FRS	11	Free-run Stop	
EXT	12	External Trip	
USP	13	Unattended Start Protection	
CS	14	Commercial power source switchover	
SFT	15	Software Lock	
AT	16	Analog Input Voltage/Current Select	
RS	18	Reset Inverter	
PTC	19	PTC thermistor Thermal Protection	
STA	20	Start (3-wire interface)	
STP	21	Stop (3-wire interface)	
F/R	22	FWD, REV (3-wire interface)	
PID	23	PID Disable	
PIDC	24	PID Reset	
UP	27	Remote Control UP Function	
DWN	28	Remote Control Down Function	
UDC	29	Remote Control Data Clearing	
OPE	31	Operator Control	
SF1~SF7	32~38	Multi-speed Select,Bit operation Bit 1~7	
OLR	39	Overload Restriction Source Changeover	
TL	40	Torque Limit Selection	
TRQ1	41	Torque limit switch 1	
TRQ2	42	Torque limit switch 2	
BOK	44	Brake confirmation	
LAC	46	LAD cancellation	
PCLR	47	Pulse counter clear	
ADD	50	ADD frequency enable	
F-TM	51	Force Terminal Mode	
ATR	52	Permission for torque command input	
KHC	53	Clear watt-hour data	
MI1~MI7	56~62	General purpose input (1)~(7)	
AHD	65	Analog command hold	
CP1~CP3	66~68	Multistage-position switch (1)~(3)	
ORL	69	Limit signal of zero-return	
ORG	70	Trigger signal of zero-return	
SPD	73	Speed/position changeover	
GS1	77	STO1 input (Safety related signal)	
GS2	78	STO2 input (Safety related signal)	
485	81	Starting communication signal	
PRG	82	Executing EzSQ program	
HLD	83	Retain output frequency	
ROK	84	Permission of Run command	
EB	85	Rotation direction detection (phase B)	

Use the following table to locate pages for intelligent input material in this chapter.

Input Function Summary Table			
Symbol	**Code**	**Function Name**	**Page**
DISP	86	Display limitation	
NO	255	No assign	

Intelligent Outputs

Use the following table to locate pages for intelligent output material in this chapter.

Input Function Summary Table			
Symbol	**Code**	**Function Name**	**Page**
RUN	00	Run Signal	
FA1	01	Frequency Arrival Type 1–Constant Speed	
FA2	02	Frequency Arrival Type 2–Over frequency	
OL	03	Overload Advance Notice Signal	
OD	04	PID Deviation error signal	
AL	05	Alarm Signal	
FA3	06	Frequency Arrival Type 3–Set frequency	
OTQ	07	Over/under Torque Threshold	
UV	09	Undervoltage	
TRQ	10	Torque Limited Signal	
RNT	11	Run Time Expired	
ONT	12	Power ON time Expired	
THM	13	Thermal Warning	
BRK	19	Brake Release Signal	
BER	20	Brake Error Signal	
ZS	21	Zero Hz Speed Detection Signal	
DSE	22	Speed Deviation Excessive	
POK	23	Positioning Completion	
FA4	24	Frequency Arrival Type 4–Over frequency	
FA5	25	Frequency Arrival Type 5–Set frequency	
OL2	26	Overload Advance Notice Signal 2	
ODc	27	Analog Voltage Input Disconnect Detection	
OIDc	28	Analog Voltage Output Disconnect Detection	
FBV	31	PID Second Stage Output	
NDc	32	Network Disconnect Detection	
LOG1~3	33~35	Logic Output Function 1~3	
WAC	39	Capacitor Life Warning Signal	
WAF	40	Cooling Fan Warning Signal	
FR	41	Starting Contact Signal	
OHF	42	Heat Sink Overheat Warning	
LOC	43	Low load detection	
MO1~3	44~46	General Output 1~3	
IRDY	50	Inverter Ready Signal	
FWR	51	Forward Operation	
RVR	52	Reverse Operation	
MJA	53	Major Failure Signal	
WCO	54	Window Comparator for Analog Voltage Input	
WCOI	55	Window Comparator for Analog Current Input	
FREF	58	Frequency Command Source	
REF	59	Run Command Source	
SETM	60	2nd Motor in operation	
EDM	62	STO (Safe Torque Off) Performance Monitor (Output terminal 11 only)	
OP	63	Option control signal	
no	255	Not used	

Using Intelligent Input Terminals

Terminals [1], [2], [3], [4], [5], [6] and [7] are identical, programmable inputs for general use. The input circuits can use the inverter's internal (isolated) +24V field supply or an external power supply. This section describes input circuits operation and how to connect them properly to switches or transistor outputs on field devices.

The WJ200 inverter features selectable *sinking* or *sourcing* inputs. These terms refer to the connection to the external switching device–it either *sinks* current (from the input to GND) or *sources* current (from a power source) into the input. Note that the sink/source naming convention may be different in your particular country or industry. In any case, just follow the wiring diagrams in this section for your application.

The inverter has a short bar (jumper) for configuring the choice of sinking or sourcing inputs. To access it, you must remove the front cover of the inverter housing. In the figure to the top right, the short bar is shown as attached to the logic terminal block (connector). For EU and US version (suffix –xFE, and –xFU), it is originally located as source type logic. If you need to change to the sink type connection, remove the short bar and connect it as shown in the figure at the bottom right.

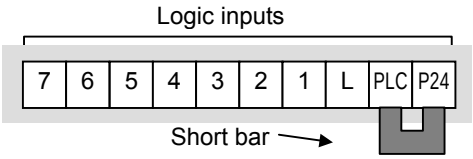

Sink logic connection

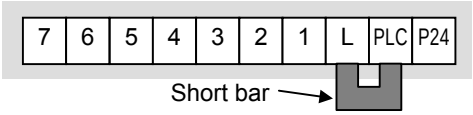

Source logic connection

CAUTION: Be sure to turn OFF power to the inverter before changing the short circuit bar position. Otherwise, damage to the inverter circuitry may occur.

[PLC] Terminal Wiring – The [PLC] terminal (Programmable Logic Control terminal) is named to include various devices that can connect to the inverter's logic inputs. In the figure to the right, note the [PLC] terminal and the short bar (jumper). Locating the short bar between [PLC] and [L] sets the input logic source type, which is the default setting for EU and US versions. In this case, you connect input terminal to [P24] to make it active. If instead you locate the short bar between [PLC] and [P24], the input logic will be sink type. In this case, you connect the input terminal to [L] to make it active.

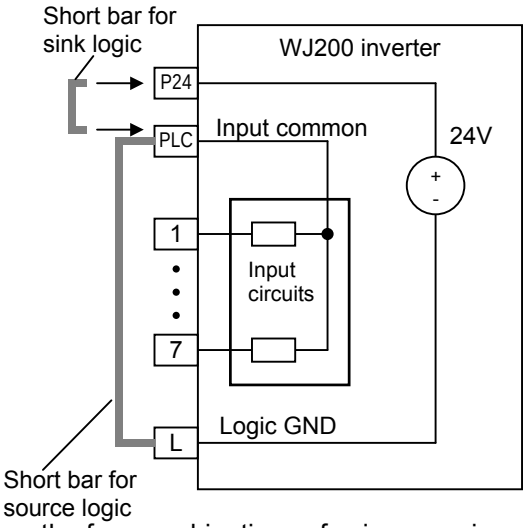

The wiring diagram on the following pages show the four combinations of using sourcing or sinking inputs, and using the internal or an external DC supply.

The two diagrams below input wiring circuits using the inverter's internal +24V supply. Each diagram shows the connection for simple switches, or for a field device with transistor outputs. Note that in the lower diagram, it is necessary to connect terminal [L] only when using the field device with transistors. Be sure to use the correct connection of the short bar shown for each wiring diagram.

Sinking Inputs, Internal Supply

Short bar = [PLC] – [P24] position

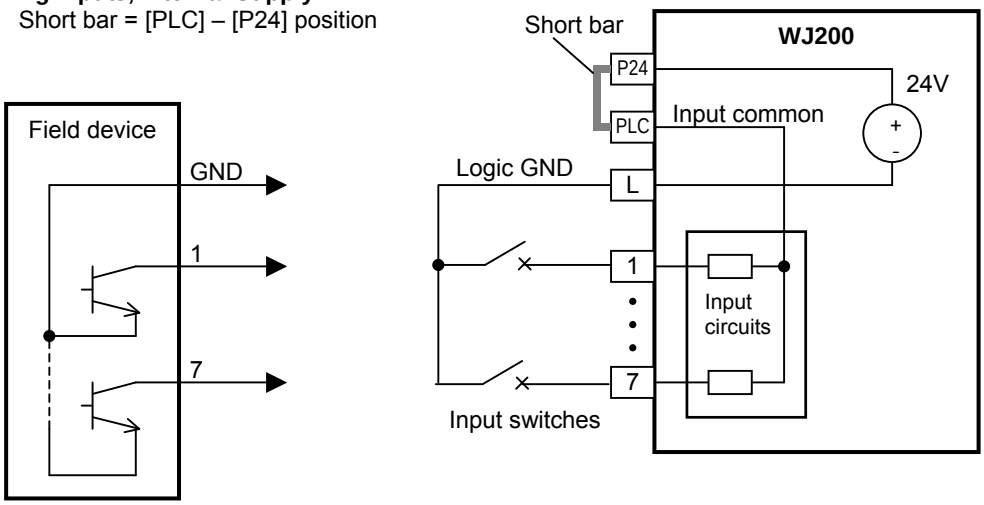

Open collector outputs,
NPN transistors

Sourcing Inputs, Internal Supply

Short bar = [PLC] – [L] position

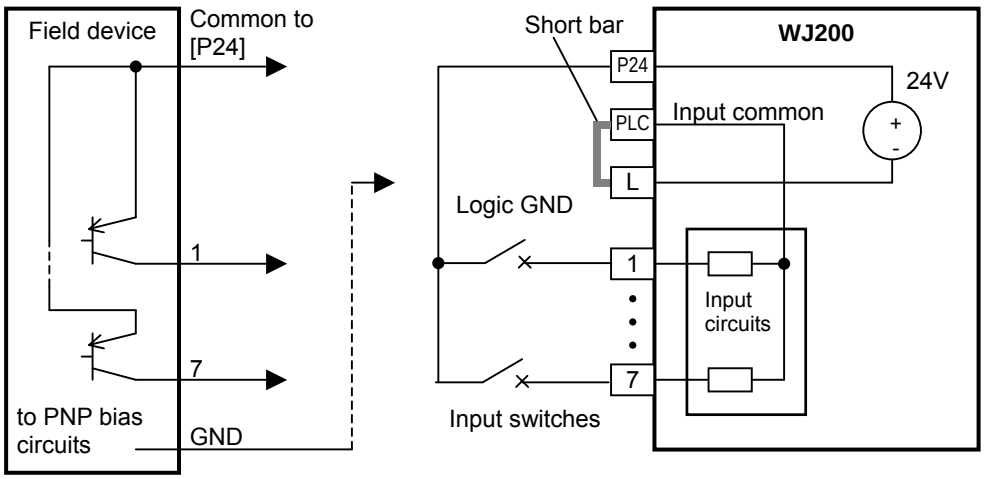

PNP transistor
sousing outputs

The two diagrams below show input wiring circuits using an external supply. If using the "Sinking Inputs, External Supply" in below wiring diagram, be sure to remove the short bar, and use a diode (*) with the external supply. This will prevent a power supply contention in case the short bar is accidentally placed in the incorrect position. For the "Sourcing Inputs, External Supply", please connect the short bar as drawn in the diagram below.

Sinking Inputs, External Supply
Short bar = Removed

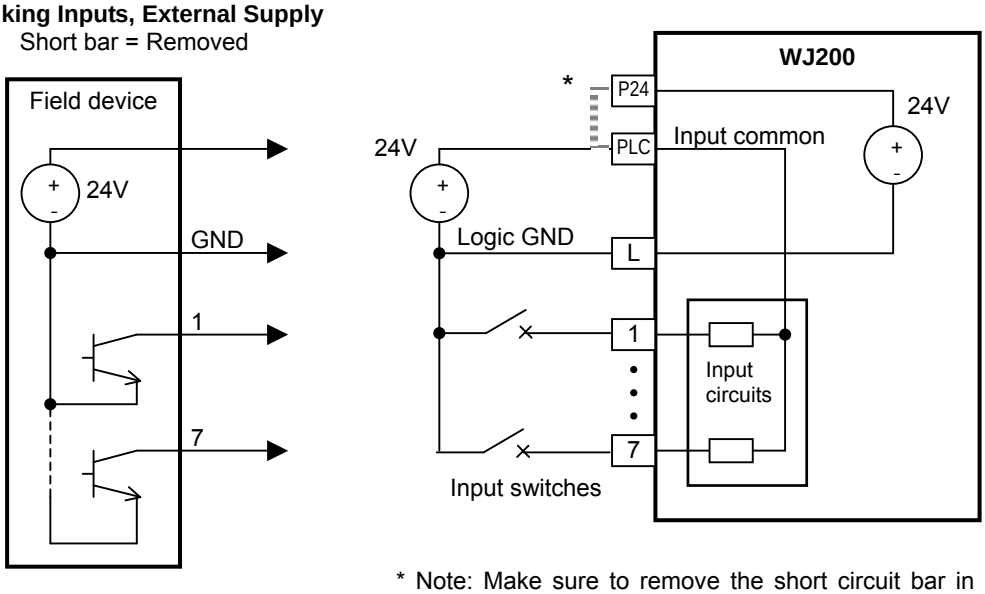

Open collector outputs, NPN transistors

* Note: Make sure to remove the short circuit bar in case of using an external power supply.

Sourcing Inputs, External Supply
Short bar = [PLC] – [L]

PNP transistor sourcing outputs

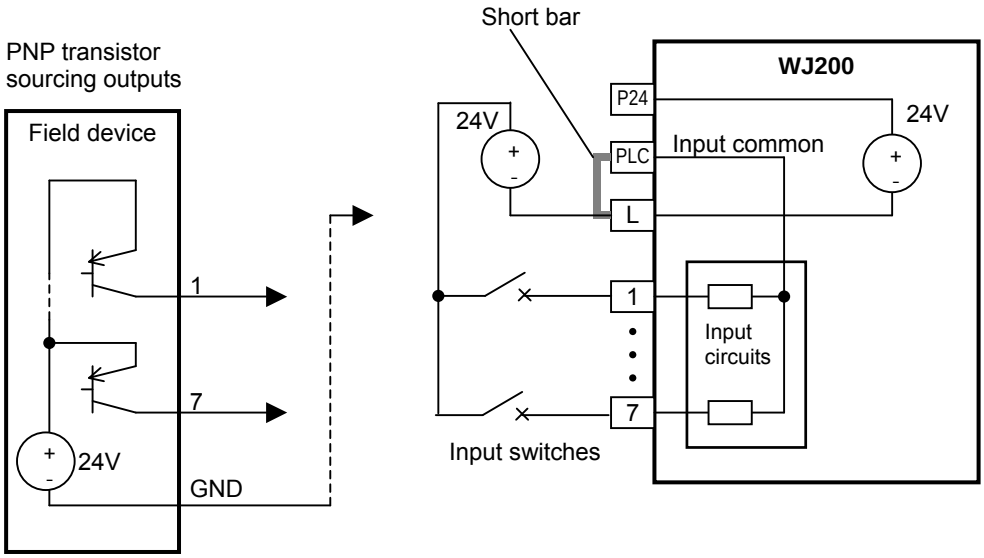

CAUTION: Be sure to diode in between "P24" and "PLC" when connecting plural inverters with digital input wiring in common.

The power to the inverter control part can be supplied externally as shown below. Except driving motor, it is possible read and write the parameters by keypad and via communication even the drive itself is not powered.

By having ability inverter doesn't block the current flowing into itself when it is not powered. This may cause the closed circuit when two or more inverters are connected to common I/O wiring as shown below to result in unexpected turning the on the input. To avoid this closed circuit, please put the diode (rated:50V/0.1A) in the path as described below.

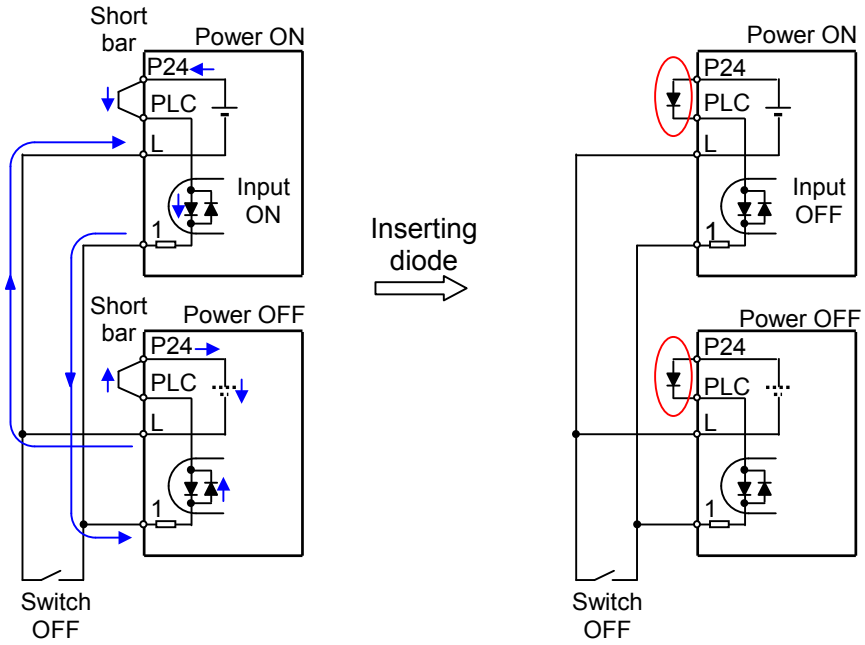

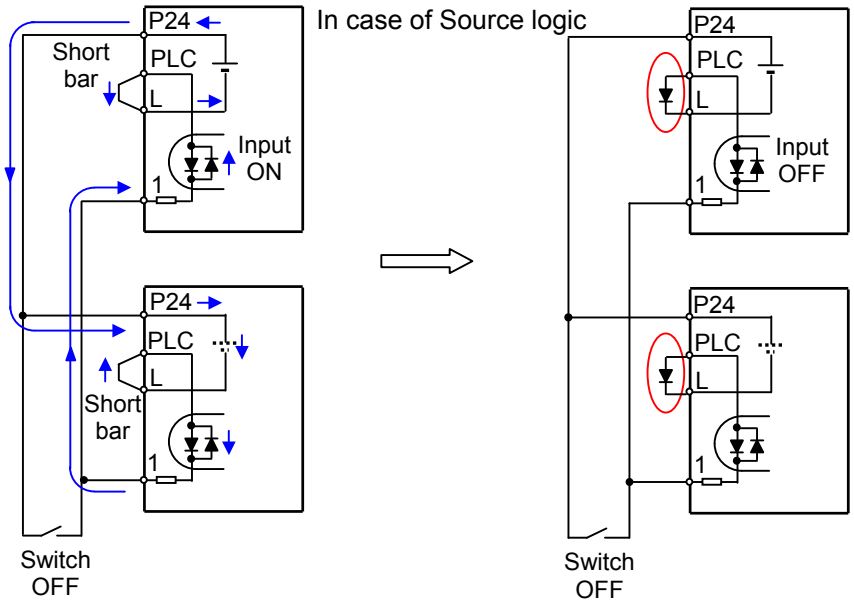

Forward Run/Stop and Reverse Run/Stop Commands:

When you input the Run command via the terminal [FW], the inverter executes the Forward Run command (high) or Stop command (low). When you input the Run command via the terminal [RV], the inverter executes the Reverse Run command (high) or Stop command (low).

Option Code	Terminal Symbol	Function Name	State	Description
00	FW	Forward Run/Stop	ON	Inverter is in Run Mode, motor runs forward
			OFF	Inverter is in Stop Mode, motor stops
01	RV	Reverse Run/Stop	ON	Inverter is in Run Mode, motor runs reverse
			OFF	Inverter is in Stop Mode, motor stops

Valid for inputs:	C001~C007
Required settings	A002 = 01

Notes:

- When the Forward Run and Reverse Run commands are active at the same time, the inverter enters the Stop Mode.
- When a terminal associated with either [FW] or [RV] function is configured for *normally closed*, the motor starts rotation when that terminal is disconnected or otherwise has no input voltage.

Example (default input configuration shown – see page 3-49)

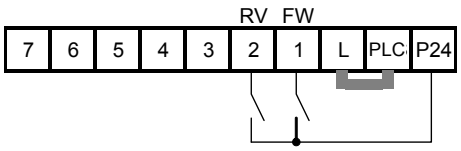

See I/O specs on page 4-6.

NOTE: The parameter F004, Keypad Run Key Routing, determines whether the single Run key issues a Run FWD command or Run REV command. However, it has no effect on the [FW] and [RV] input terminal operation.

WARNING: If the power is turned ON and the Run command is already active, the motor starts rotation and is dangerous! Before turning power ON, confirm that the Run command is not active.

Multi-Speed Select ~Binary Operation

The inverter can store up to 16 different target frequencies (speeds) that the motor output uses for steady-state run condition. These speeds are accessible through programming four of the intelligent terminals as binary-encoded inputs CF1 to CF4 per the table to the right. These can be any of the six inputs, and in any order. You can use fewer inputs if you need eight or fewer speeds.

Multi-speed	Input Function			
	CF4	CF3	CF2	CF1
Speed 0	0	0	0	0
Speed 1	0	0	0	1
Speed 2	0	0	1	0
Speed 3	0	0	1	1
Speed 4	0	1	0	0
Speed 5	0	1	0	1
Speed 6	0	1	1	0
Speed 7	0	1	1	1
Speed 8	1	0	0	0
Speed 9	1	0	0	1
Speed 10	1	0	1	0
Speed 11	1	0	1	1
Speed 12	1	1	0	0
Speed 13	1	1	0	1
Speed 14	1	1	1	0
Speed 15	1	1	1	1

NOTE: When choosing a subset of speeds to use, always start at the top of the table, and with the least-significant bit: CF1, CF2, etc.

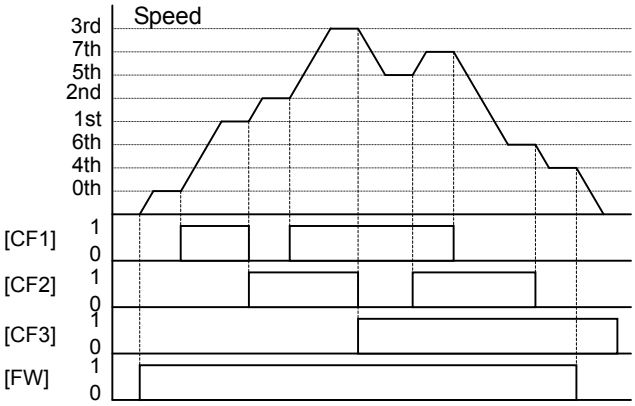

The example with eight speeds in the figure below shows how input switches configured for CF1–CF3 functions can change the motor speed in real time.

NOTE: Speed 0 depends on A001 parameter value.

Option Code	Terminal Symbol	Function Name	State	Description
02	CF1	Multi-speed Select, Bit 0 (LSB)	ON	Binary encoded speed select, Bit 0, logical 1
			OFF	Binary encoded speed select, Bit 0, logical 0
03	CF2	Multi-speed Select, Bit 1	ON	Binary encoded speed select, Bit 1, logical 1
			OFF	Binary encoded speed select, Bit 1, logical 0
04	CF3	Multi-speed Select, Bit 2	ON	Binary encoded speed select, Bit 2, logical 1
			OFF	Binary encoded speed select, Bit 2, logical 0
05	CF4	Multi-speed Select, Bit 3 (MSB)	ON	Binary encoded speed select, Bit 3, logical 1
			OFF	Binary encoded speed select, Bit 3, logical 0

Valid for inputs:	C001~C007
Required settings	F001, A001=02, A020 to A035

Notes:

- When programming the multi-speed settings, be sure to press the SET key each time and then set the next multi-speed setting. Note that when the key is not pressed, no data will be set.
- When a multi-speed setting more than 50Hz (60Hz) is to be set, it is necessary to program the maximum frequency A004 high enough to allow that speed

Example (some CF inputs require input configuration; some are default inputs):

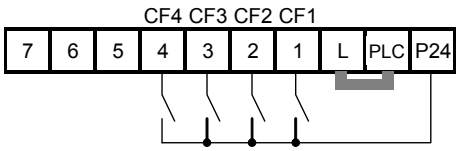

See I/O specs on page 4–6.

Two Stage Acceleration and Deceleration

When terminal [2CH] is turned ON, the inverter changes the rate of acceleration and deceleration from the initial settings (F002 and F003) to use the second set of acceleration/ deceleration values. When the terminal is turned OFF, the inverter is returned to the original acceleration and deceleration time (F002 acceleration time 1, and F003 deceleration time 1). Use A092 (acceleration time 2) and A093 (deceleration time 2) to set the second stage acceleration and deceleration times.

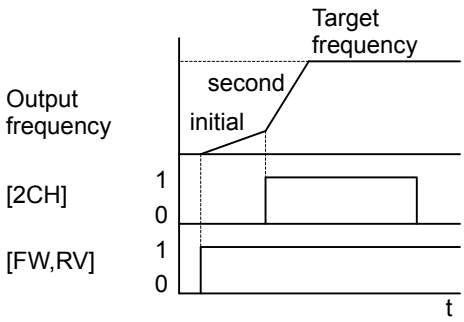

In the graph shown above, the [2CH] becomes active during the initial acceleration. This causes the inverter to switch from using acceleration 1 (F002) to acceleration 2 (A092).

Option Code	Terminal Symbol	Function Name	State	Description
09	2CH	Two-stage Acceleration and Deceleration	ON	Frequency output uses 2nd-stage acceleration and deceleration values
			OFF	Frequency output uses the initial acceleration 1 and deceleration 1 values

Valid for inputs:	C001~C007
Required settings	A092, A093, A094=00

Notes:

- Function A094 selects the method for second stage acceleration. It must be set = 00 to select the input terminal method in order for the [2CH] terminal assignment to operate.

Example (default input configuration shown—see page 3–49):

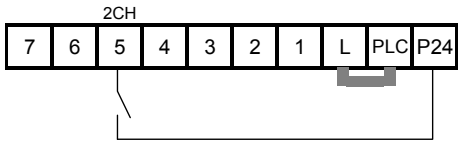

See I/O specs on page 4–6.

Unattended Start Protection

If the Run command is already set when power is turned ON, the inverter starts running immediately after powerup. The Unattended Start Protection (USP) function prevents that automatic startup, so that the inverter *will not* run without outside intervention. When USP is active and you need to reset an alarm and resume running, either turn the Run command OFF, or perform a reset operation by the terminal [RS] input or the keypad Stop/reset key.

In the figure below, the [USP] feature is enabled. When the inverter power turns ON, the motor does not start, even though the Run command is already active. Instead, it enters the USP trip state, and displays E 13 error code. This requires outside intervention to reset the alarm by turning OFF the Run command per this example (or applying a reset). Then the Run command can turn ON again and start the inverter output.

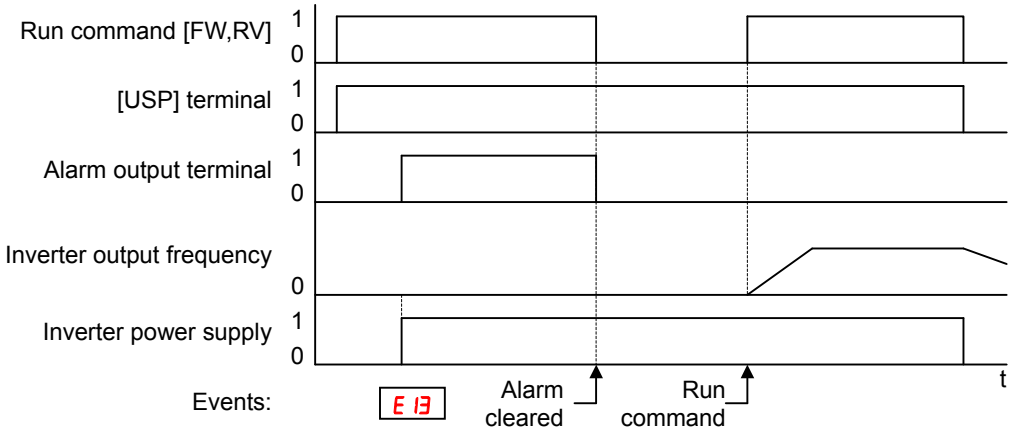

Option Code	Terminal Symbol	Function Name	State	Description
13	USP	Unattended Start Protection	ON	On powerup, the inverter will not resume a Run command (mostly used in the US)
			OFF	On powerup, the inverter will resume a Run command that was active before power loss
Valid for inputs:		C001~C007		Example (default input configuration shown for –FE and –FU models; –F models require input configuration—see page 3–49):
Required settings		(none)		

Notes:

- Note that when a USP error occurs and it is canceled by a reset from a [RS] terminal input, the inverter restarts running immediately.
- Even when the trip state is canceled by turning the terminal [RS] ON and OFF after an under voltage protection E09 occurs, the USP function will be performed.
- When the running command is active immediately after the power is turned ON, a USP error will occur. When this function is used, wait for at least three (3) seconds after the powerup to generate a Run command.

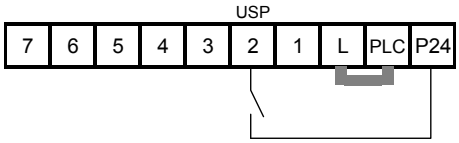

See I/O specs on page 4–6.

Reset Inverter

The [RS] terminal causes the inverter to execute the reset operation. If the inverter is in Trip Mode, the reset cancels the Trip state. When the signal [RS] is turned ON and OFF, the inverter executes the reset operation. The minimum pulse width for [RS] must be 12 ms or greater. The alarm output will be cleared within 30 ms after the onset of the Reset command.

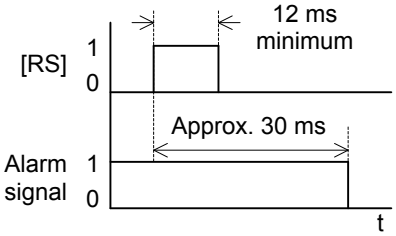

WARNING: After the Reset command is given and the alarm reset occurs, the motor will restart suddenly if the Run command is already active. Be sure to set the alarm reset after verifying that the Run command is OFF to prevent injury to personnel.

Option Code	Terminal Symbol	Function Name	State	Description
18	RS	Reset Inverter	ON	The motor output is turned OFF, the Trip Mode is cleared (if it exists), and powerup reset is applied
			OFF	Normal power ON operation

Valid for inputs:	C001~C007
Required settings	(none)

Notes:

- While the control terminal [RS] input is ON, the keypad displays alternating segments. After RS turns OFF, the display recovers automatically.
- Pressing the Stop/Reset key of the digital operator can generate a reset operation only when an alarm occurs.

Example (default input configuration shown):

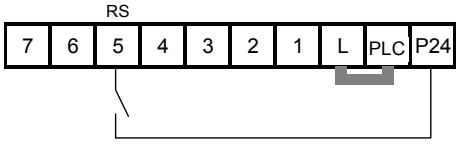

See I/O specs on page 4–6.

- A terminal configured with the [RS] function can only be configured for normally open operation. The terminal cannot be used in the normally closed contact state.
- When input power is turned ON, the inverter performs the same reset operation as it does when a pulse on the [RS] terminal occurs.
- The Stop/Reset key on the inverter is only operational for a few seconds after inverter powerup when a hand-held remote operator is connected to the inverter.
- If the [RS] terminal is turned ON while the motor is running, the motor will be free running (coasting).
- If you are using the output terminal OFF delay feature (any of C145, C147, C149 > 0.0 sec.), the [RS] terminal affects the ON-to-OFF transition slightly. Normally (without using OFF delays), the [RS] input causes the motor output and the logic outputs to turn OFF together, immediately. However, when any output uses an OFF delay, then after the [RS] input turns ON, that output will remain ON for an additional 1 sec. period (approximate) before turning OFF.

Run Signal

When the [RUN] signal is selected as an intelligent output terminal, the inverter outputs a signal on that terminal when it is in Run Mode. The output logic is active low, and is the open collector type (switch to ground).

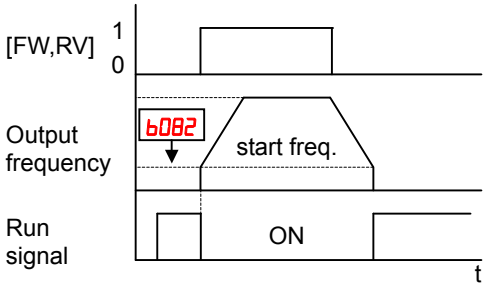

Option Code	Terminal Symbol	Function Name	State	Description
00	RUN	Run Signal	ON	when inverter is in Run Mode
			OFF	when inverter is in Stop Mode

Valid for inputs:	11, 12, AL0 – AL2
Required settings	(none)

Notes:

- The inverter outputs the [RUN] signal whenever the inverter output exceeds the start frequency specified by parameter b082. The start frequency is the initial inverter output frequency when it turns ON.
- The example circuit for terminal [11] drives a relay coil. Note the use of a diode to prevent the negative going turn-off spike generated by the coil from damaging the inverter's output transistor.

Example for terminal [11] (default output configuration shown – see page 3-54):

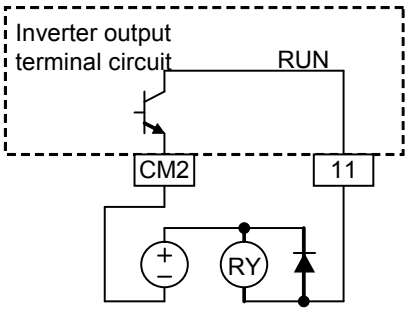

Example for terminal [AL0], [AL1], [AL2] (requires output configuration – see page 4-35 and 3-54):

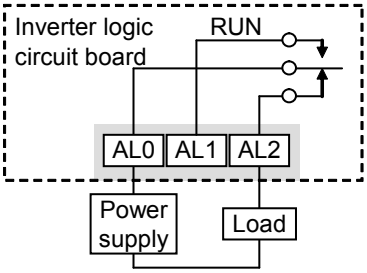

See I/O specs on page 4-6

Frequency Arrival Signals

The *Frequency Arrival* group of outputs helps coordinate external systems with the current velocity profile of the inverter. As the name implies, output [FA1] turns ON when the output *frequency arrives* at the standard set frequency (parameter F001). Output [FA2] relies on programmable accel/ decel thresholds for increased flexibility. For example, you can have an output turn ON at one frequency during acceleration, and have it turn OFF at a different frequency during deceleration. All transitions have hysteresis to avoid output chatter if the output frequency is near one of the thresholds.

Option Code	Terminal Symbol	Function Name	State	Description
01	FA1	Frequency Arrival Type 1 – Constant Speed	ON	when output to motor is at the constant frequency
			OFF	when output to motor is OFF, or in any acceleration or deceleration ramp
02	FA2	Frequency Arrival Type 2 – Over frequency	ON	when output to motor is at or above the set frequency thresholds for, even if in acceleration or decel ramps
			OFF	when output to motor is OFF, or during accel or decel before the respective thresholds are crossed
06	FA3	Frequency Arrival Type 3 – Set frequency	ON	when output to motor is at the set frequency
			OFF	when output to motor is OFF, or in any acceleration or deceleration ramp
24	FA4	Frequency Arrival Type 4 – Over frequency (2)	ON	when output to motor is at or above the set frequency thresholds for, even if in acceleration or decel ramps
			OFF	when output to motor is OFF, or during accel or decel before the respective thresholds are crossed
25	FA5	Frequency Arrival Type 5 – Set frequency (2)	ON	when output to motor is at the set frequency
			OFF	when output to motor is OFF, or in any acceleration or deceleration ramp

Valid for inputs:	11, 12, AL0 – AL2
Required settings	C042, C043, C045, C046,

Notes:

- For most applications you will need to use only one type of frequency arrival outputs (see examples). However, it is possible assign both output terminals to output functions [FA1] and [FA2]
- For each frequency arrival threshold, the output anticipates the threshold (turns ON early) by 1.5Hz
- The output turns OFF as the output frequency moves away from the threshold, delayed by 0.5Hz
- The example circuit for terminal [11] drives a relay coil. Note the use of a diode to prevent the negative going turn-off spike generated by the coil from damaging the inverter's output transistor

Example for terminal [11] (default output configuration shown – see page 3-54):

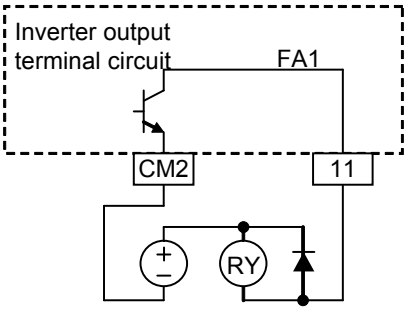

Example for terminal [AL0], [AL1], [AL2] (requires output configuration – see page 54):

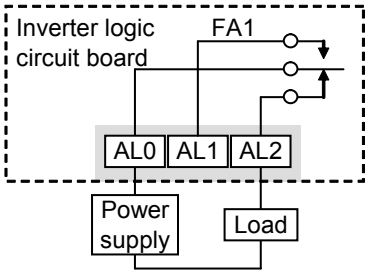

See I/O specs on page 4-6

Frequency arrival output [FA1] uses the standard output frequency (parameter F001) as the threshold for switching. In the figure to the right, Frequency Arrival [FA1] turns ON when the output frequency gets within *Fon* Hz below or *Fon* Hz above the target constant frequency, where *Fon* is 1% of the set maximum frequency and *Foff* is 2% of the set maximum frequency. This provides hysteresis that prevents output chatter near the threshold value. The hysteresis effect causes the output to turn ON slightly *early* as the speed approaches the threshold. Then the turn-OFF point is slightly *delayed*. Note the active low nature of the signal, due to the open collector output.

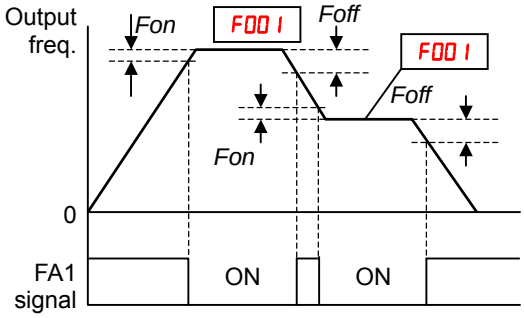

Fon=1% of max. frequency
Foff=2% of max. frequency

Frequency arrival output [FA2/FA4] works the same way; it just uses two separate thresholds as shown in the figure to the right. These provide for separate acceleration and deceleration thresholds to provide more flexibility than for [FA1]. [FA2/FA4] uses C042/C045 during acceleration for the ON threshold, and C043/C046 during deceleration for the OFF threshold. This signal also is active low. Having different accel and decel thresholds provides an asymmetrical output function. However, you can use equal ON and OFF thresholds, if desired.

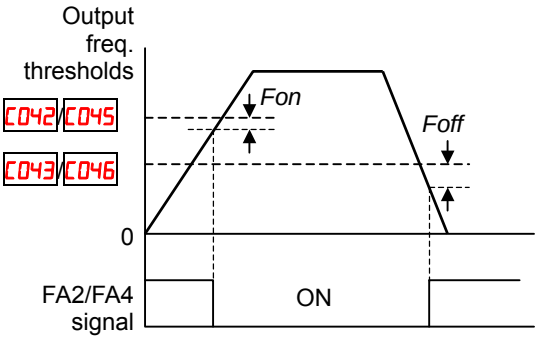

Fon=1% of max. frequency
Foff=2% of max. frequency

Frequency arrival output [FA3/FA5] works also the same way, only difference is arriving at set frequency.

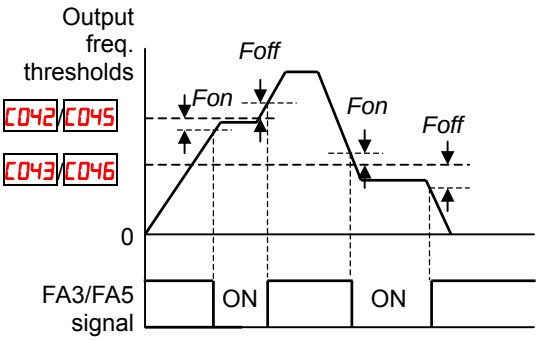

Fon=1% of max. frequency
Foff=2% of max. frequency

Alarm Signal

The inverter alarm signal is active when a fault has occurred and it is in the Trip Mode (refer to the diagram at right). When the fault is cleared the alarm signal becomes inactive.

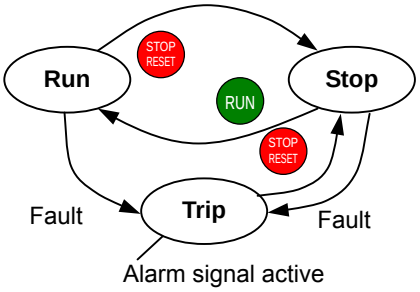

We must make a distinction between the alarm *signal* AL and the alarm relay *contacts* [AL0], [AL1] and [AL2]. The signal AL is a logic function, which you can assign to the open collector output terminals [11], [12], or the relay outputs.
The most common (and default) use of the relay is for AL, thus the labeling of its terminals. Use an open collector output (terminal [11] or [12]) for a low-current logic signal interface or to energize a small relay (50 mA maximum). Use the relay output to interface to higher voltage and current devices (10 mA minimum).

Option Code	Terminal Symbol	Function Name	State	Description
05	AL	Alarm Signal	ON	when an alarm signal has occurred and has not been cleared
			OFF	when no alarm has occurred since the last clearing of alarm(s)

Valid for inputs:	11, 12, AL0 – AL2
Required settings	C031, C032, C036

Notes:

- By default, the relay is configured as normally closed (C036=01). Refer to the next page for an explanation.
- In the default relay configuration, an inverter power loss turns ON the alarm output. the alarm signal remains ON as long as the external control circuit has power.
- When the relay output is set to normally closed, a time delay of less than 2 seconds occurs after powerup before the contact is closed.
- Terminals [11] and [12] are open collector outputs, so the electric specifications of [AL] are different from the contact output terminals [AL0], [AL1], [AL2].
- This signal output has the delay time (300 ms nominal) from the fault alarm output.
- The relay contact specifications are in "Control Logic Signal Specifications" on page 4–6. The contact diagrams for different conditions are on the next page.

Example for terminal [11] (default output configuration shown – see page 3-54):

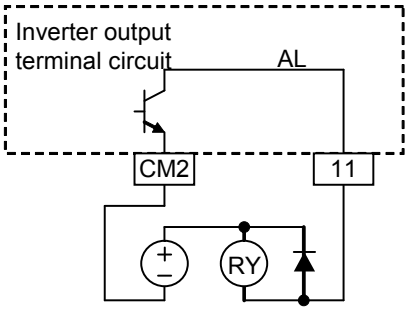

Example for terminal [AL0], [AL1], [AL2] (requires output configuration – see page 4-35 and 3-54):

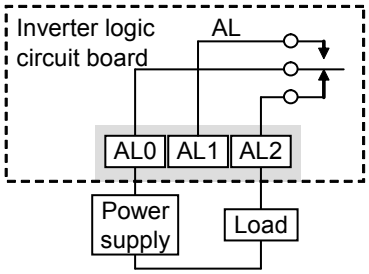

See I/O specs on page 4-6

The alarm relay output can be configured in two main ways:

- **Trip/Power Loss Alarm –** The alarm relay is configured as normally closed (C036=01) by default, shown below (left). An external alarm circuit that detects broken wiring also as an alarm connects to [AL0] and [AL1]. After powerup and short delay (< 2 seconds), the relay energizes and the alarm circuit is OFF. Then, either an inverter trip event or an inverter power loss will de-energize the relay and open the alarm circuit

- **Trip Alarm –** Alternatively, you can configure the relay as normally open (C036=00), shown below (right). An external alarm circuit that detects broken wiring also as an alarm connects to [AL0] and [AL2]. After powerup, the relay energizes only when an inverter trip event occurs, opening the alarm circuit. However, in this configuration, an inverter power loss does not open the alarm circuit.

Be sure to use the relay configuration that is appropriate for your system design. Note that the external circuits shown assume that a closed circuit = no alarm condition (so that a broken wire also causes an alarm). However, some systems may require a closed circuit = alarm condition. In that case, then use the opposite terminal [AL1] or [AL2] from the ones shown.

N.C. contacts (C036=01)		N.O. contacts (C036=00)	
During normal operation	When an alarm occurs or when power is OFF	During normal operation or when power is OFF	When an alarm occurs

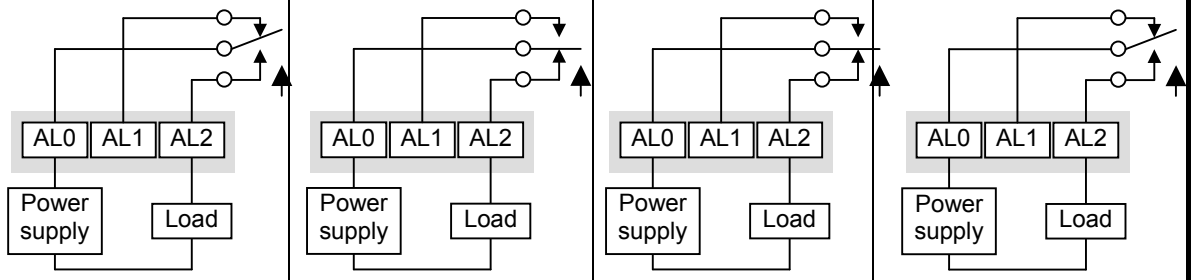

Power	Run Mode	AL0-AL1	AL0-AL2
ON	Normal	Closed	Open
ON	Trip	Open	Closed
OFF	–	Open	Closed

Power	Run Mode	AL0-AL1	AL0-AL2
ON	Normal	Open	Closed
ON	Trip	Closed	Open
OFF	–	Open	Closed

Analog Input Operation

The WJ200 inverters provide for analog input to command the inverter frequency output value. The analog input terminal group includes the [L], [OI], [O], and [H] terminals on the control connector, which provide for Voltage [O] or Current [OI] input. All analog input signals must use the analog ground [L].

If you use either the voltage or current analog input, you must select one of them using the logic input terminal function [AT] analog type. Refer to the table on next page showing the activation of each analog input by combination of A005 set parameter and [AT] terminal condition. The [AT] terminal function is covered in "Analog Input Current/Voltage Select" in section 4. Remember that you must also set A001 = 01 to select analog input as the frequency source.

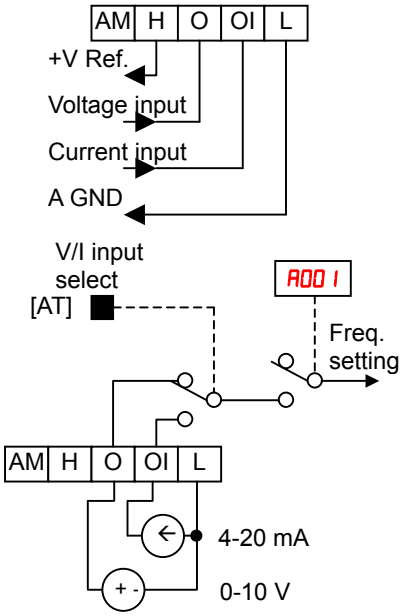

NOTE: If no logic input terminal is configured for the [AT] function, then inverter recognizes that [AT]=OFF and MCU recognizes [O]+[OI] as analog input.

Using an external potentiometer is a common way to control the inverter output frequency (and a good way to learn how to use the analog inputs). The potentiometer uses the built-in 10V reference [H] and the analog ground [L] for excitation, and the voltage input [O] for the signal. By default, the [AT] terminal selects the voltage input when it is OFF.
Take care to use the proper resistance for the potentiometer, which is 1~2 kΩ, 2 Watts.

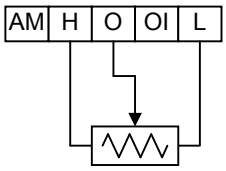

1 to 2kΩ, 2W

Voltage Input – The voltage input circuit uses terminals [L] and [O]. Attach the signal cable's shield wire only to terminal [L] on the inverter. Maintain the voltage within specifications (do not apply negative voltage).

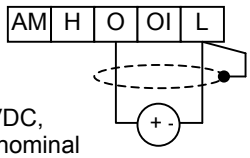

0 to 9.6 VDC,
0 to 10V nominal

Current Input – The current input circuit uses terminals [OI] and [L]. The current comes from a *sourcing* type transmitter; a *sinking* type will not work! This means the current must flow into terminal [OI], and terminal [L] is the return back to the transmitter. The input impedance from [OI] to [L] is 100 Ohms. Attach the cable shield wire only to terminal [L] on the inverter.

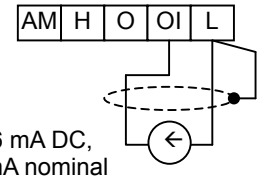

4 to 19.6 mA DC,
4 to 20mA nominal

See I/O specs on page 4-6.

The following table shows the available analog input settings. Parameter A005 and the input terminal [AT] determine the External Frequency Command input terminals that are available, and how they function. The analog inputs [O] and [OI] use terminal [L] as the reference (signal return).

A005	[AT] Input	Analog Input Configuration
00	ON	[O]
	OFF	[OI]
02	ON	[O]
	OFF	Integrated POT on external panel
03	ON	[OI]
	OFF	Integrated POT on external panel

Other Analog Input-related topics:

- "Analog Input Settings"
- "Additional Analog Input Settings"
- "Analog Signal Calibration Settings"
- "Analog Input Current/Voltage Select"
- "ADD Frequency Enable"
- "Analog Input Disconnect Detect"

Pulse Train Input Operation

The WJ200 inverter is capable of accepting pulse train input signals, that are used for frequency command, process variable (feedback) for PID control, and simple positioning. The dedicated terminal is called “EA” and “EB”. Terminal “EA” is a dedicated terminal, and the terminal “EB” is an intelligent terminal, that has to be changed by a parameter setting.

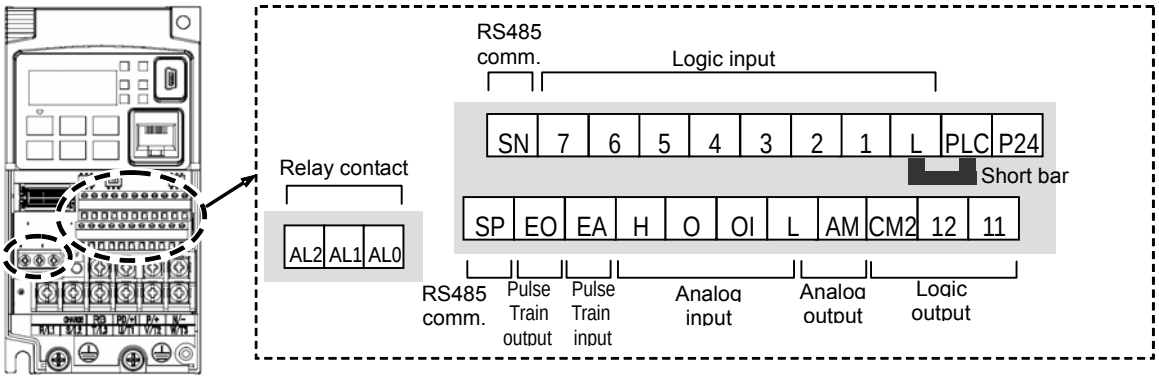

Terminal Name	Description	Ratings
EA	Pulse train input A	For frequency command, 32kHz max. Reference voltage: Common is [L]
EB (Input terminal 7)	Pulse train input B (Set C007 to 85)	27Vdc max. For frequency command, 2kHz max. Reference voltage: Common is [PLC]

(1) Frequency Command by pulse train input

When using this mode, you should set A001 to 06. In this case the frequency is detected by input-capture, and calculated based on the ratio of designated max. frequency (under 32kHz). Only an input terminal “EA” will be used in this case.

(2) Using for process variable of PID control

You can use the pulse train input for process variable (feedback) of PID control. In this case you need to set A076 to 03. Only “EA” input terminal is to be used.

(3) Simple positioning by pulse train input

This is to use the pulse train input like an encoder signal. You can select three types of operation.

Analog Output Operation

In inverter applications it is useful to monitor the inverter operation from a remote location or from the front panel of an inverter enclosure. In some cases, this requires only a panel-mounted volt meter. In other cases, a controller such as a PLC may provide the inverter's frequency command, and require inverter feedback data (such as output frequency or output current) to confirm actual operation. The analog output terminal [AM] serves these purposes.

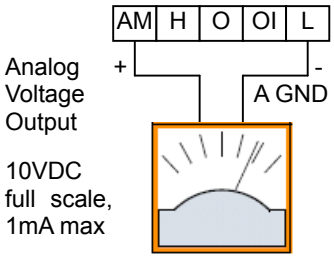

See I/O specs on page 4-6

The inverter provides an analog voltage output on terminal [AM] with terminal [L] as analog GND reference. The [AM] can output inverter frequency or current output value. Note that the voltage range is 0 to +10V (positive-going only), regardless of forward or reverse motor rotation. Use C028 to configure terminal [AM] as indicated below.

Func.	Code	Description
C028	00	Inverter output frequency
	01	Inverter output current
	02	Inverter output torque
	03	Digital output freqnency
	04	Inverter output goltage
	05	Inverter input power
	06	Electronic Thermal Load
	07	LAD frequency
	08	Digital current monitor
	10	Cooling fin temperature
	12	General purpose
	15	Pulse train
	16	Option

The [AM] signal offset and gain are adjustable, as indicated below.

Func.	Description	Range	Default
C 106	[AM] output gain	0.~255.	100.
C 109	[AM] output offset	0.0~10.0	0.0

The graph below shows the effect of the gain and offset setting. To calibrate the [AM] output for your application (analog meter), follow the steps below:

1. Run the motor at the full scale speed, or most common operating speed.

a. If the analog meter represents output frequency, adjust offset (C 109) first, and then use C 106 to set the voltage for full scale output.

b. If [AM] represents motor current, adjust offset (C 109) first, and then use bC 106 to set the voltage for full scale output. Remember to leave room at the upper end of the range for increased current when the motor is under heavier loads.

AM output offset adjustment

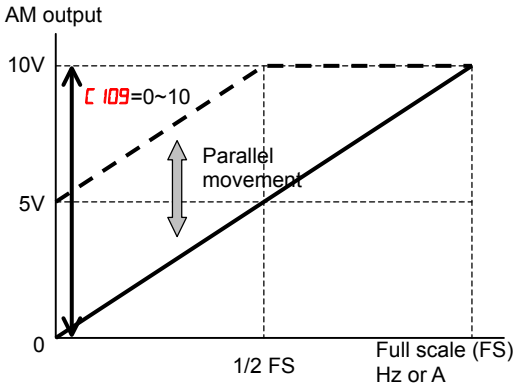

AM output gain adjustment

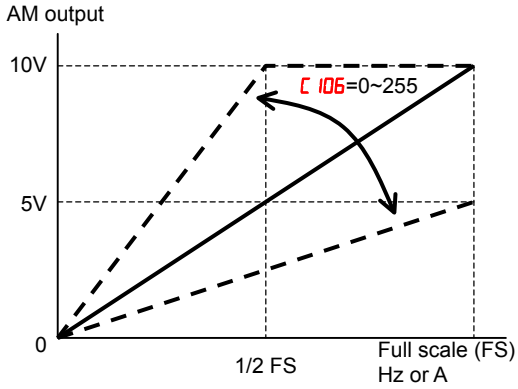

NOTE: As mentioned above, first adjust the offset, and then adjust the gain. Otherwise the required performance cannot be obtained because of the parallel movement of the offset adjustment.

Monitoring functions

NOTE:. Mark "✓" in b031=10 shows the accessible parameters when b031 is set "10", high level access.

"d" Function			Run Mode Edit	Units
Func. Code	Name	Description		
d001	Output frequency monitor	Real time display of output frequency to motor from 0.0 to 400.0Hz If b163 is set high, output frequency (F001) can be changed by up/down key with d001 monitoring.	–	Hz
d002	Output current monitor	Filtered display of output current to motor, range is 0 to 655.3 ampere (~99.9 ampere for 1.5kW and less)	–	A
d003	Rotation direction monitor	Three different indications: "F" …Forward "o" …Stop "r" …Reverse	–	–
d004	Process variable (PV), PID feedback monitor	Displays the scaled PID process variable (feedback) value (A075 is scale factor), 0.00 to 10000	–	% times constant
d005	Intelligent input terminal status	Displays the state of the intelligent input terminals: 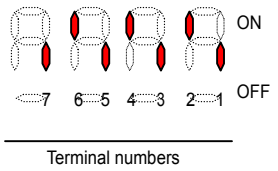	–	–
d006	Intelligent output terminal status	Displays the state of the intelligent output terminals: 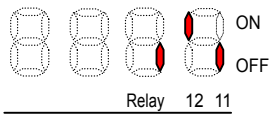	–	–

"d" Function			Run Mode Edit	Units
Func. Code	Name	Description		
d007	Scaled output frequency monitor	Displays the output frequency scaled by the constant in b086. Decimal point indicates range: 0 to 3999	–	Hz times constant
d008	Actual frequency monitor	Displays the actual frequency, range is -400 to 400 Hz	–	Hz
d009	Torque command monitor	Displays the torque command, range is -200 to 200 %	–	%
d010	Torque bias monitor	Displays the torque bias value, range is -200 to 200 %	–	%
d012	Output torque monitor	Displays the output torque, range is -200 to 200 %	–	%
d013	Output voltage monitor	Voltage of output to motor, Range is 0.0 to 600.0V	–	V
d014	Input power monitor	Displays the input power, range is 0 to 999.9 kW	–	KW
d015	Watt-hour monitor	Displays watt-hour of the inverter, range is 0 to 9999000	–	
d016	Elapsed RUN time monitor	Displays total time the inverter has been in RUN mode in hours. Range is 0 to 9999 / 1000 to 9999 / ⌈100 to ⌈999 (10,000 to 99,900)	–	hours
d017	Elapsed power-on time monitor	Displays total time the inverter has been powered up in hours. Range is 0 to 9999 / 1000 to 9999 / ⌈100 to ⌈999 (10,000 to 99,900)	–	hours
d018	Heat sink temperature monitor	Temperature of the cooling fin, range is -20~150	–	°C
d022	Life check monitor	Displays the state of lifetime of electrolytic capacitors on the PWB and cooling fan. 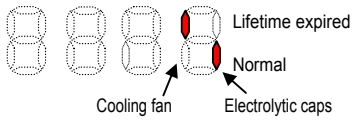 	–	–
d023	Program counter monitor [EzSQ]	Range is 0 to 1024	–	–
d024	Program number monitor [EzSQ]	Range is 0 to 9999	–	–
d025	User monitor 0 [EzSQ]	Result of EzSQ execution, range is –2147483647~2147483647	–	–
d026	User monitor 1 [EzSQ]	Result of EzSQ execution, range is –2147483647~2147483647	–	–
d027	User monitor 2 [EzSQ]	Result of EzSQ execution, range is –2147483647~2147483647	–	–
d029	Positioning command monitor	Displays the positioning command, range is –268435455~+268435455	–	–
d030	Current position monitor	Displays the current position, range is –268435455~+268435455	–	–
d050	Dual monitor	Displays two different data configured in b160 and b161.	–	–
d060	Inverter mode monitor	Displays currently selected inverter mode : I-C:IM CT mode/I-v:IM VT mode/ P:PM	–	–

"d" Function			Run Mode Edit	Units
Func. Code	Name	Description		
d080	Trip counter	Number of trip events, Range is 0. to 65530	–	events
d081	Trip monitor 1	Displays trip event information: • Error code • Output frequency at trip point • Motor current at trip point • DC bus voltage at trip point • Cumulative inverter operation time at trip point • Cumulative power-ON time at trip point	–	–
d082	Trip monitor 2		–	–
d083	Trip monitor 3		–	–
d084	Trip monitor 4		–	–
d085	Trip monitor 5		–	–
d086	Trip monitor 6		–	–
d090	Warning monitor	Displays the warning code	–	–
d102	DC bus voltage monitor	Voltage of inverter internal DC bus, Range is 0.0 to 999.9	–	V
d103	BRD load ratio monitor	Usage ratio of integrated brake chopper, range is 0.0~100.0%	–	%
d104	Electronic thermal monitor	Accumulated value of electronic thermal detection, range is from 0.0~100.0%	–	%

Main Profile Parameters

NOTE:. Mark "✓" in b031=10 shows the accessible parameters when b031 is set "10", high level access.

"F" Function			Run Mode Edit	Defaults	
Func. Code	Name	Description		Initial data	Units
F001	Output frequency setting	Standard default target frequency that determines constant motor speed, range is 0.0 / start frequency to maximum frequency (A004)	✓	0.0	Hz
F002	Acceleration time (1)	Standard default acceleration, range is 0.01 to 3600 sec.	✓	10.0	sec.
F202	Acceleration time (1), 2nd motor		✓	10.0	sec.
F003	Deceleration time (1)	Standard default deceleration, range is 0.01 to 3600 sec.	✓	10.0	sec.
F203	Deceleration time (1), 2nd motor		✓	10.0	sec.
F004	Keypad RUN key routing	Two options; select codes: 00 …Forward 01 …Reverse	✗	00	–

Standard Functions

NOTE:. Mark "✓" in b031=10 shows the accessible parameters when b031 is set "10", high level access.

"A" Function			Run Mode Edit	Defaults	
Func. Code	Name	Description		Initial data	Units
A001	Frequency source	Eight options; select codes: 00 …POT on ext. operator 01 …Control terminal 02 …Function F001 setting 03 …ModBus network input 04 …Option 06 …Pulse train input 07 …via EzSQ 10 …Calculate function output	✕	02	–
A201	Frequency source, 2nd motor		✕	02	–
A002	Run command source	Five options; select codes: 01 …Control terminal 02 …Run key on keypad, or digital operator 03 …ModBus network input 04 …Option	✕	02	–
A202	Run command source, 2nd motor		✕	02	–
A003	Base frequency	Settable from 30 Hz to the maximum frequency(A004)	✕	60.0	Hz
A203	Base frequency, 2nd motor	Settable from 30 Hz to the 2nd maximum frequency(A204)	✕	60.0	Hz
A004	Maximum frequency	Settable from the base frequency to 400 Hz	✕	60.0	Hz
A204	Maximum frequency, 2nd motor	Settable from the 2nd base frequency to 400 Hz	✕	60.0	Hz
A005	[AT] selection	Three options; select codes: 00...Select between [O] and [OI] at [AT] (ON=OI, OFF=O) 02...Select between [O] and external POT at [AT] (ON=POT, OFF=O) 03...Select between [OI] and external POT at [AT] (ON=POT, OFF=OI)	✕	00	–
A011	[O] input active range start frequency	The output frequency corresponding to the analog input range starting point, range is 0.00 to 400.0	✕	0.00	Hz
A012	[O] input active range end frequency	The output frequency corresponding to the analog input range ending point, range is 0.0 to 400.0	✕	0.00	Hz
A013	[O] input active range start voltage	The starting point (offset) for the active analog input range, range is 0. to 100.	✕	0.	%
A014	[O] input active range end voltage	The ending point (offset) for the active analog input range, range is 0. to 100.	✕	100.	%

"A" Function			Run Mode Edit	Defaults	
Func. Code	Name	Description		Initial data	Units
A015	[O] input start frequency enable	Two options; select codes: 00…Use offset (A011 value) 01…Use 0Hz	✗	01	–
A016	Analog input filter	Range n = 1 to 31, 1 to 30 : ×2ms filter 31: 500ms fixed filter with ± 0.1kHz hys.	✗	8.	Spl.
A017			✓	00	-
A019	Multi-speed operation selection	Select codes: 00...Binary operation (16 speeds selectable with 4 terminals) 01...Bit operation (8 speeds selectable with 7 terminals)	✗	00	-
A020	Multi-speed freq. 0	Defines the first speed of a multi-speed profile, range is 0.0 / start frequency to 400Hz A020 = Speed 0 (1st motor)	✓	0.0	Hz
A220	Multi-speed freq. 0, 2nd motor	Defines the first speed of a multi-speed profile or a 2nd motor, range is 0.0 / start frequency to 400Hz A220 = Speed 0 (2nd motor)	✓	0.0	Hz
A021 to A035	Multi-speed freq. 1 to 15 (for both motors)	Defines 15 more speeds, range is 0.0 / start frequency to 400 Hz. A021=Speed 1 ~ A035=Speed15	✓	See next row	Hz
		A021 ~ A035	✓	0.0	Hz
A038	Jog frequency	Defines limited speed for jog, range is from start frequency to 9.99 Hz	✓	6.00	Hz
A039	Jog stop mode	Define how end of jog stops the motor; six options: 00…Free-run stop (invalid during run) 01…Controlled deceleration (invalid during run) 02…DC braking to stop(invalid during run) 03…Free-run stop (valid during run) 04…Controlled deceleration (valid during run) 05…DC braking to stop(valid during run)	✗	04	–
A041	Torque boost select	Two options: 00…Manual torque boost 01…Automatic torque boost	✗	00	–
A241	Torque boost select, 2nd motor		✗	00	–
A042	Manual torque boost value	Can boost starting torque between 0 and 20% above	✓	1.0	%

"A" Function			Run Mode Edit	Defaults	
Func. Code	Name	Description		Initial data	Units
A242	Manual torque boost value, 2nd motor	normal V/f curve, range is 0.0 to 20.0%	✓	1.0	%
A043	Manual torque boost frequency	Sets the frequency of the V/f breakpoint A in graph (top of previous page) for torque boost, range is 0.0 to 50.0%	✓	5.0	%
A243	Manual torque boost frequency, 2nd motor		✓	5.0	%
A044	V/f characteristic curve	Six available V/f curves; 00…Constant torque 01…Reduced torque (1.7) 02…Free V/F 03…Sensorless vector (SLV)	✗	00	–
A244	V/f characteristic curve, 2nd motor		✗	00	–
A045	V/f gain	Sets voltage gain of the inverter, range is 20. to 100.%	✓	100.	%
A245	V/f gain, 2nd motor		✓	100.	%
A046	Voltage compensation gain for automatic torque boost	Sets voltage compensation gain under automatic torque boost, range is 0. to 255.	✓	100.	–
A246	Voltage compensation gain for automatic torque boost, 2nd motor		✓	100.	–
A047	Slip compensation gain for automatic torque boost	Sets slip compensation gain under automatic torque boost, range is 0. to 255.	✓	100.	–
A247	Slip compensation gain for automatic torque boost, 2nd motor		✓	100.	–
A051	DC braking enable	Three options; select codes: 00…Disable 01…Enable during stop 02…Frequency detection	✗	00	–
A052	DC braking frequency	The frequency at which DC braking begins, range is from the start frequency (b082) to 60Hz	✗	0.5	Hz
A053	DC braking wait time	The delay from the end of controlled deceleration to start of DC braking (motor free runs until DC braking begins), range is 0.0 to 5.0 sec.	✗	0.0	sec.
A054	DC braking force for deceleration	Level of DC braking force, settable from 0 to 100%	✗	50.	%
A055	DC braking time for deceleration	Sets the duration for DC braking, range is from 0.0 to 60.0 seconds	✗	0.5	sec.
A056	DC braking / edge or level detection for [DB] input	Two options; select codes: 00…Edge detection 01…Level detection	✗	01	–
A057	DC braking force at start	Level of DC braking force at start, settable from 0 to 100%	✗	0.	%

"A" Function			Run Mode Edit	Defaults	
Func. Code	Name	Description		Initial data	Units
A058	DC braking time at start	Sets the duration for DC braking, range is from 0.0 to 60.0 seconds	✕	0.0	sec.
A059	Carrier frequency during DC braking	Carrier frequency of DC braking performance, range is from 2.0 to 15.0kHz	✕	5.0	sec.
A061	Frequency upper limit	Sets a limit on output frequency less than the maximum frequency (A004). Range is from frequency lower limit (A062) to maximum frequency (A004). 0.0 setting is disabled >0.0 setting is enabled	✕	0.00	Hz
A261	Frequency upper limit, 2nd motor	Sets a limit on output frequency less than the maximum frequency (A204). Range is from frequency lower limit (A262) to maximum frequency (A204). 0.0 setting is disabled >0.0 setting is enabled	✕	0.00	Hz
A062	Frequency lower limit	Sets a limit on output frequency greater than zero. Range is start frequency (b082) to frequency upper limit (A061) 0.0 setting is disabled >0.0 setting is enabled	✕	0.00	Hz
A262	Frequency lower limit, 2nd motor	Sets a limit on output frequency greater than zero. Range is start frequency (b082) to frequency upper limit (A261) 0.0 setting is disabled >0.0 setting is enabled	✕	0.00	Hz
A063 A065 A067	Jump freq. (center) 1 to 3	Up to 3 output frequencies can be defined for the output to jump past to avoid motor resonances (center frequency) Range is 0.0 to 400.0 Hz	✕	0.0 0.0 0.0	Hz
A064 A066 A068	Jump freq. width (hysteresis) 1 to 3	Defines the distance from the center frequency at which the jump around occurs Range is 0.0 to 10.0 Hz	✕	0.5 0.5 0.5	Hz
A069	Acceleration hold frequency	Sets the frequency to hold acceleration, range is 0.0 to 400.0Hz	✕	0.00	Hz
A070	Acceleration hold time	Sets the duration of acceleration hold, range is 0.0 to 60.0 seconds	✕	0.0	sec.
A071	PID enable	Enables PID function, three option codes: 00…PID Disable 01…PID Enable 02…PID Enable with reverse output	✕	00	–

"A" Function			Run Mode Edit	Defaults	
Func. Code	Name	Description		Initial data	Units
A072	PID proportional gain	Proportional gain has a range of 0.00 to 25.00	✓	1.0	–
A073	PID integral time constant	Integral time constant has a range of 0.0 to 3600 seconds	✓	1.0	sec
A074	PID derivative time constant	Derivative time constant has a range of 0.0 to 100 seconds	✓	0.00	sec
A075	PV scale conversion	Process Variable (PV), scale factor (multiplier), range of 0.01 to 99.99	✗	1.00	–
A076	PV source	Selects source of Process Variable (PV), option codes: 00…[OI] terminal (current in) 01…[O] terminal (voltage in) 02…ModBus network 03…Pulse train input 10…Calculate function output	✗	00	–
A077	Reverse PID action	Two option codes: 00…PID input = SP-PV 01…PID input = -(SP-PV)	✗	00	–
A078	PID output limit	Sets the limit of PID output as percent of full scale, range is 0.0 to 100.0%	✗	0.0	%
A079	PID feed forward selection	Selects source of feed forward gain, option codes: 00…Disabled 01…[O] terminal (voltage in) 02…[OI] terminal (current in)	✗	00	–
A081	AVR function select	Automatic (output) voltage regulation, selects from three type of AVR functions, three option codes: 00…AVR enabled 01…AVR disabled 02…AVR enabled except during deceleration	✗	02	–
A281	AVR function select, 2nd motor		✗	02	–
A082	AVR voltage select	200V class inverter settings: ……200/215/220/230/240 400V class inverter settings: ……380/400/415/440/460/480	✗	200/ 400	V
A282	AVR voltage select, 2nd motor		✗	200/ 400	V
A083	AVR filter time constant	Define the time constant of the AVR filter, range is 0 to 10 sec.	✗	0.300	sec
A084	AVR deceleration gain	Gain adjustment of the braking performance, range is 50 to 200%	✗	100.	%
A085	Energy-saving operation mode	Two option codes: 00…Normal operation 01…Energy-saving operation	✗	00	–
A086	Energy-saving mode tuning	Range is 0.0 to 100 %.	✗	50.0	%

"A" Function			Run Mode Edit	Defaults	
Func. Code	Name	Description		Initial data	Units
A092	Acceleration time (2)	Duration of 2nd segment of acceleration, range is: 0.01 to 3600 sec.	✓	10.00	sec
A292	Acceleration time (2), 2nd motor		✓	10.00	sec
A093	Deceleration time (2)	Duration of 2nd segment of deceleration, range is: 0.01 to 3600 sec.	✓	10.00	sec
A293	Deceleration time (2), 2nd motor		✓	10.00	sec
A094	Select method to switch to Acc2/Dec2 profile	Three options for switching from 1st to 2nd accel/decel: 00…2CH input from terminal 01…Transition frequency 02…Forward and reverse	✗	00	–
A294	Select method to switch to Acc2/Dec2 profile, 2nd motor		✗	00	–
A095	Acc1 to Acc2 frequency transition point	Output frequency at which Accel1 switches to Accel2, range is 0.0 to 400.0 Hz	✗	0.0	Hz
A295	Acc1 to Acc2 frequency transition point, 2nd motor		✗	0.0	Hz
A096	Dec1 to Dec2 frequency transition point	Output frequency at which Decel1 switches to Decel2, range is 0.0 to 400.0 Hz	✗	0.0	Hz
A296	Dec1 to Dec2 frequency transition point, 2nd motor		✗	0.0	Hz
A097	Acceleration curve selection	Set the characteristic curve of Acc1 and Acc2, five options: 00…linear 01…S-curve 02…U-curve 03…Inverse U-curve 04…EL S-curve	✗	00	–
A098	Deceleration curve selection	Set the characteristic curve of Dec1 and Dec2, options are same as above (A097)	✗	00	–
A101	[OI] input active range start frequency	The output frequency corresponding to the analog input range starting point, range is 0.0 to 400.0 Hz	✗	0.00	Hz
A102	[OI] input active range end frequency	The output frequency corresponding to the current input range ending point, range is 0.0 to 400.0 Hz	✗	0.0	Hz
A103	[OI] input active range start current	The starting point (offset) for the current input range, range is 0. to 100.%	✗	20.	%
A104	[OI] input active range end current	The ending point (offset) for the current input range, range is 0. to 100.%	✗	100.	%
A105	[OI] input start frequency select	Two options; select codes: 00…Use offset (A101 value) 01…Use 0Hz	✗	00	–

"A" Function			Run Mode Edit	Defaults	
Func. Code	Name	Description		Initial data	Units
A131	Acceleration curve constant	Range is 01 to 10.	✗	02	–
A132	Deceleration curve constant	Range is 01 to 10.	✗	02	–
A141	A input select for calculate function	Seven options: 00…Operator 01…VR 02…Terminal [O] input 03…Terminal [OI] input 04…RS485 05…Option 07…Pulse train input	✗	02	–
A142	B input select for calculate function	Seven options: 00…Operator 01…VR 02…Terminal [O] input 03…Terminal [OI] input 04…RS485 05…Option 07…Pulse train input	✗	03	–
A143	Calculation symbol	Calculates a value based on the A input source (A141 selects) and B input source (A142 selects). Three options: 00…ADD (A input + B input) 01…SUB (A input - B input) 02…MUL (A input * B input)	✗	00	–
A145	ADD frequency	An offset value that is applied to the output frequency when the [ADD] terminal is ON. Range is 0.0 to 400.0 Hz	✓	0.00	Hz
A146	ADD direction select	Two options: 00…Plus (adds A145 value to the output frequency setting) 01…Minus (subtracts A145 value from the output frequency setting)	✗	00	–
A150	Curvature of EL-S-curve at the start of acceleration	Range is 0 to 50%	✗	10.	%
A151	Curvature of EL-S-curve at the end of acceleration	Range is 0 to 50%	✗	10.	%
A152	Curvature of EL-S-curve at the start of deceleration	Range is 0 to 50%	✗	10.	%
A153	Curvature of EL-S-curve at the end of deceleration	Range is 0 to 50%	✗	10.	%
A154	Deceleration hold frequency	Sets the frequency to hold deceleration, range is 0.0 to 400.0Hz	✗	0.0	Hz
A155	Deceleration hold time	Sets the duration of deceleration hold, range is 0.0 to 60.0 seconds	✗	0.0	sec.

"A" Function			Run Mode Edit	Defaults	
Func. Code	Name	Description		Initial data	Units
A 156	PID sleep function action threshold	Sets the threshold for the action, set range 0.0~400.0 Hz	✕	0.00	Hz
A 157	PID sleep function action delay time	Sets the delay time for the action, set range 0.0~25.5 sec	✕	0.0	sec
A 161	[VR] input active range start frequency	The output frequency corresponding to the analog input range starting point, range is 0.0 to 400.0 Hz	✕	0.00	Hz
A 162	[VR] input active range end frequency	The output frequency corresponding to the current input range ending point, range is 0.0 to 400.0 Hz	✕	0.00	Hz
A 163	[VR] input active range start %	The starting point (offset) for the current input range, range is 0. to 100.%	✕	0.	%
A 164	[VR] input active range end %	The ending point (offset) for the current input range, range is 0. to 100.%	✕	100.	%
A 165	[VR] input start frequency select	Two options; select codes: 00…Use offset (A 161 value) 01…Use 0Hz	✕	01	–

Fine Tuning Functions

"b" Function			Run Mode Edit	Defaults	
Func. Code	Name	Description		Initial data	Units
b001	Restart mode on power failure / under-voltage trip	Select inverter restart method, Five option codes: 00…Alarm output after trip, no automatic restart 01…Restart at 0Hz 02…Resume operation after frequency matching 03…Resume previous freq. after freq. matching, then decelerate to stop and display trip info 04…Resume operation after active freq. matching	✕	00	–
b002	Allowable under-voltage power failure time	The amount of time a power input under-voltage can occur without tripping the power failure alarm. Range is 0.3 to 25 sec. If under-voltage exists longer than this time, the inverter trips, even if the restart mode is selected.	✕	1.0	sec.
b003	Retry wait time before motor restart	Time delay after under-voltage condition goes away, before the inverter runs motor again. Range is 0.3 to 100 seconds.	✕	1.0	sec.
b004	Instantaneous power failure / under-voltage trip alarm enable	Three option codes: 00…Disable 01…Enable 02…Disable during stop and decelerates to a stop	✕	00	–
b005	Number of restarts on power failure / under-voltage trip events	Two option codes: 00…Restart 16 times 01…Always restart	✕	00	–
b007	Restart frequency threshold	Restart the motor from 0Hz if the frequency becomes less than this set value during the motor is coasting, range is 0 to 400Hz	✕	0.00	Hz
b008	Restart mode on over voltage / over current trip	Select inverter restart method, Five option codes: 00…Alarm output after trip, no automatic restart 01…Restart at 0Hz 02…Resume operation after frequency matching 03…Resume previous freq. after active freq. matching, then decelerate to stop and display trip info 04…Resume operation after active freq. matching	✕	00	–
b010	Number of retry on over voltage / over current trip	Range is 1 to 3 times	✕	3	times
b011	Retry wait time on over voltage / over current trip	Range is 0.3 to 100 sec.	✕	1.0	sec

"b" Function			Run Mode Edit	Defaults	
Func. Code	Name	Description		Initial data	Units
b012	Level of electronic thermal	Set a level between 20% and 100% for the rated inverter current.	✕	Rated current for each inverter model *1	A
b212	Level of electronic thermal, 2nd motor		✕		A
b013	Electronic thermal characteristic	Select from three curves, option codes: 00…Reduced torque 01…Constant torque 02…Free setting	✕	01	–
b213	Electronic thermal characteristic, 2nd motor		✕	01	–
b015	Free setting electronic thermal ~freq.1	Range is 0 to 400Hz	✕	0.0	Hz
b016	Free setting electronic thermal ~current1	Range is 0 to inverter rated current Amps	✕	0.00	Amps
b017	Free setting electronic thermal ~freq.2	Range is 0 to 400Hz	✕	0.0	Hz
b018	Free setting electronic thermal ~current2	Range is 0 to inverter rated current Amps	✕	0.00	Amps
b019	Free setting electronic thermal ~freq.3	Range is 0 to 400Hz	✕	0.0	Hz
b020	Free setting electronic thermal ~current3	Range is 0 to inverter rated current Amps	✕	0.00	Amps
b021	Overload restriction operation mode	Select the operation mode during overload conditions, four options, option codes: 00…Disabled 01…Enabled for acceleration and constant speed 02…Enabled for constant speed only 03…Enabled for acceleration and constant speed, increase speed at regen.	✕	01	–
b221	Overload restriction operation mode, 2nd motor		✕	01	–
b022	Overload restriction level	Sets the level of overload restriction, between 20% and 200% of the rated current of the inverter, setting resolution is 1% of rated current	✕	Rated current x 1.5	Amps
b222	Overload restriction level, 2nd motor		✕	Rated current x 1.5	Amps
b023	Deceleration rate at overload restriction	Sets the deceleration rate when inverter detects overload, range is 0.1 to 3000.0, resolution 0.1	✕	1.0	sec.
b223	Deceleration rate at overload restriction, 2nd motor		✕	1.0	sec.
b024	Overload restriction operation mode 2	Select the operation mode during overload conditions, four options, option codes: 00…Disabled 01…Enabled for acceleration and constant speed 02…Enabled for constant speed only 03…Enabled for acceleration and constant speed, increase speed at regen.	✕	01	–

"b" Function			Run Mode Edit	Defaults	
Func. Code	Name	Description		Initial data	Units
b025	Overload restriction level 2	Sets the level of overload restriction, between 20% and 200% of the rated current of the inverter, setting resolution is 1% of rated current	✕	Rated current x 1.5	
b026	Deceleration rate 2 at overload restriction	Sets the deceleration rate when inverter detects overload, range is 0.1 to 3000.0, resolution 0.1	✕	1.0	sec.
b027	OC suppression selection *	Two option codes: 00…Disabled 01…Enabled	✕	01	–
b028	Current level of active freq. matching	Sets the current level of active freq. matching restart, range is 0.1*inverter rated current to 2.0*inverter rated current, resolution 0.1	✕	Rated current	A
b029	Deceleration rate of active freq. matching	Sets the deceleration rate when active freq. matching restart, range is 0.1 to 3000.0, resolution 0.1	✕	0.5	sec.
b030	Start freq. of active freq. matching	Three option codes: 00…freq at previous shutoff 01…start from max. Hz 02…start from set frequency	✕	00	–
b031	Software lock mode selection	Prevents parameter changes, in five options, option codes: 00…all parameters except b031 are locked when [SFT] terminal is ON 01…all parameters except b031 and output frequency F001 are locked when [SFT] terminal is ON 02…all parameters except b031 are locked 03…all parameters except b031 and output frequency F001 are locked 10…High level access including b031 *See appendix C for the accessible parameters in this mode.*	✕	01	–
b033	Motor cable length parameter	Set range is 5 to 20.	✕	10.	–
b034	Run/power ON warning time	Range is, 0.:Warning disabled 1. to 9999.: 10~99,990 hrs (unit: 10) 1000 to 6553: 100,000~655,350 hrs (unit: 100)	✕	0.	Hrs.
b035	Rotation direction restriction	Three option codes: 00…No restriction 01…Reverse rotation is restricted 02…Forward rotation is restricted	✕	00	–
b036	Reduced voltage start selection	Set range, 0 (disabling the function), 1 (approx. 6ms) to 255 (approx. 1.5s)	✕	2	–

"b" Function			Run Mode Edit	Defaults	
Func. Code	Name	Description		Initial data	Units
b037	Function code display restriction	Seven option codes: 00…Full display 01…Function-specific display 02…User setting (and b037) 03…Data comparison display 04…Basic display 05…Monitor display only	✕	04	–
b038	Initial display selection	000…Func. code that SET key pressed last displayed.(*) 001~030…d001~d030 displayed 201…F001 displayed 202…B display of LCD operator	✕	001	–
b039	Automatic user parameter registration	Two option codes: 00…Disable 01…Enable	✕	00	
b040	Torque limit selection	Four option codes: 00…Quadrant-specific setting mode 01…Terminal-switching mode 02…Analog voltage input mode(O)	✕	00	
b041	Torque limit 1 (fwd/power)	Torque limit level in forward powering quadrant, range is 0 to 200%/no(disabled)	✕	200	%
b042					
b043	Torque limit 3 (rev/power)	Torque limit level in reverse powering quadrant, range is 0 to 200%/no(disabled)	✕	200	%
b044	Torque limit 4 (fwd/regen.)	Torque limit level in forward regen. quadrant, range is 0 to 200%/no(disabled)	✕	200	%
b045	Torque LAD STOP selection	Two option codes: 00…Disable 01…Enable	✕	00	
b046	Reverse run protection	Two option codes: 00…No protection 01…Reverse rotation is protected	✕	01	–
b049	Dual Rating Selection	00… (CT mode) / 01… (VT mode)	✕	00	
b050	Controlled deceleration on power loss	Four option codes: 00…Trips 01…Decelerates to a stop 02…Decelerates to a stop with DC bus voltage controlled 03…Decelerates to a stop with DC bus voltage controlled, then restart	✕	00	–
b051	DC bus voltage trigger level of ctrl. decel.	Setting of DC bus voltage to start controlled decel. operation. Range is 0.0 to 1000.0	✕	220.0/ 440.0	V
b052	Over-voltage threshold of ctrl. decel.	Setting the OV-LAD stop level of controlled decel. operation. Range is 0.0 to 1000.0	✕	360.0/ 720.0	V
b053	Deceleration time of ctrl. decel.	Range is 0.01 to 3600.0	✕	1.0	sec
b054	Initial freq. drop of ctrl. decel.	Setting of initial freq. drop. Range is 0.0 to 10.0 Hz	✕	0.0	Hz

"b" Function			Run Mode Edit	Defaults	
Func. Code	Name	Description		Initial data	Units
b060	Maximum-limit level of window comparator (O)	Set range, {Min.-limit level (b061) + hysteresis width (b062)x2} to 100 % (Minimum of 0%)	✗	100.	%
b061	Minimum-limit level of window comparator (O)	Set range, 0 to {Max.-limit level (b060) - hysteresis width (b062)x2} % (Maximum of 0%)	✓	0.	%
b062	Hysteresis width of window comparator (O)	Set range, 0 to {Max.-limit level (b060) - Min.-limit level (b061)}/2 % (Maximum of 10%)	✓	0.	%
b063	Maximum-limit level of window comparator (OI)	Set range, {Min.-limit level (b064 + hysteresis width (b065)x2} to 100 % (Minimum of 0%)	✓	100.	%
b064	Minimum-limit level of window comparator (OI)	Set range, 0 to {Max.-limit level (b063) - hysteresis width (b065)x2} % (Maximum of 0%)	✓	0.	%
b065	Hysteresis width of window comparator (OI)	Set range, 0 to {Max.-limit level (b063) - Min.-limit level (b064)}/2 % (Maximum of 10%)	✓	0.	%
b070	Operation level at O disconnection	Set range, 0 to 100%, or "no" (ignore)	✗	no	-
b071	Operation level at OI disconnection	Set range, 0 to 100%, or "no" (ignore)	✗	no	-
b075	Ambient temperature setting	Set range is, -10~50 °C	✓	40	°C
b078	Watt-hour clearance	Two option codes: 00…OFF 01…ON (press STR then clear)	✓	00	-
b079	Watt-hour display gain	Set range is, 1.~1000.	✓	1.	
b082	Start frequency	Sets the starting frequency for the inverter output, range is 0.10 to 9.99 Hz	✗	0.50	Hz
b083	Carrier frequency	Sets the PWM carrier (internal switching frequency), range is 2.0 to 15.0 kHz	✗	2.0	kHz
b084	Initialization mode (parameters or trip history)	Select initialized data, five option codes: 00…Initialization disabled 01…Clears Trip history 02…Initializes all Parameters 03…Clears Trip history and initializes all parameters 04…Clears Trip history and initializes all parameters and EzSQ program	✗	00	–
b085	Country for initialization	Select default parameter values for country on initialization, two option codes: 00…area A 01…area B	✗	00	–
b086	Frequency scaling conversion factor	Specify a constant to scale the displayed frequency for d007 monitor, range is 0.01 to 99.99	✗	1.00	–

"b" Function			Run Mode Edit	Defaults	
Func. Code	Name	Description		Initial data	Units
b087	STOP key enable	Select whether the STOP key on the keypad is enabled, three option codes: 00…Enabled 01…Disabled always 02… Disabled for stop	×	00	–
b088	Restart mode after FRS	Selects how the inverter resumes operation when free-run stop (FRS) is cancelled, three options: 00…Restart from 0Hz 01…Restart from frequency detected from real speed of motor (freq. matching) 02…Restart from frequency detected from real speed of motor (active freq. matching)	×	00	–
b089	Automatic carrier frequency reduction	Three option codes: 00…Disabled 01…Enabled, depending on the output current 02…Enabled, depending on the heat-sink temperature	×	01	-
b090	Dynamic braking usage ratio	Selects the rate of use (in %) of the regenerative braking resistor per 100 sec. intervals, range is 0.0 to 100%. 0%: Function disabled >0%: Enabled, per value	×	0.0	%
b091	Stop mode selection	Select how the inverter stops the motor, two option codes: 00…DEC (decelerate to stop) 01…FRS (free-run to stop)	×	00	–
b092	Cooling fan control	Selects when the fan is ON during inverter operation, four options: 00…Fan is always ON 01…Fan is ON during run, OFF during stop (5 minute delay from ON to OFF) 02…Fan is temperature controlled	×	01	-
b093	Clear elapsed time of cooling fan	Two option codes: 00…Count 01…Clear	×	00	-
b094	Initialization target data	Select initialized parameters, four option codes: 00…All parameters 01…All parameters except in/output terminals and communication. 02…Only registered parameters in Uxxx. 03…All parameters except registered parameters in Uxxx and b037.	×	00	-
b095	Dynamic braking control (BRD) selection	Three option codes: 00…Disable 01…Enable during run only 02…Enable always	×	01	-

"b" Function			Run Mode Edit	Defaults	
Func. Code	Name	Description		Initial data	Units
b096	BRD activation level	Range is: 330 to 380V (200V class) 660 to 760V (400V class)	✕	360/ 720	V
b097	BRD resistor value	Min.Resistance to 600.0	✕	Min. Resistance	Ohm
b100	Free V/F setting, freq.1	Set range, 0 ~ value of b102	✕	0.	Hz
b101	Free V/F setting, voltage.1	Set range, 0 ~ 800V	✕	0.0	V
b102	Free V/F setting, freq.2	Set range, value of b100 ~b104	✕	0.	Hz
b103	Free V/F setting, voltage.2	Set range, 0 ~ 800V	✕	0.0	V
b104	Free V/F setting, freq.3	Set range, value of b102 ~b106	✕	0.	Hz
b105	Free V/F setting, voltage.3	Set range, 0 ~ 800V	✕	0.0	V
b106	Free V/F setting, freq.4	Set range, value of b104 ~b108	✕	0.	Hz
b107	Free V/F setting, voltage.4	Set range, 0 ~ 800V	✕	0.0	V
b108	Free V/F setting, freq.5	Set range, value of b108 ~b110	✕	0.	Hz
b109	Free V/F setting, voltage.5	Set range, 0 ~ 800V	✕	0.0	V
b110	Free V/F setting, freq.6	Set range, value of b108 ~b112	✕	0.	Hz
b111	Free V/F setting, voltage.6	Set range, 0 ~ 800V	✕	0.0	V
b112	Free V/F setting, freq.7	Set range, b110 ~ 400	✕	0.	Hz
b113	Free V/F setting, voltage.7	Set range, 0 ~ 800V	✕	0.0	V
b120	Brake control enable	Two option codes: 00…Disable 01…Enable	✕	00	-
b121	Brake Wait Time for Release	Set range: 0.00 to 5.00 sec	✕	0.00	Sec
b122	Brake Wait Time for Acceleration	Set range: 0.00 to 5.00 sec	✕	0.00	Sec
b123	Brake Wait Time for Stopping	Set range: 0.00 to 5.00 sec	✕	0.00	Sec
b124	Brake Wait Time for Confirmation	Set range: 0.00 to 5.00 sec	✕	0.00	Sec
b125	Brake release freq.	Set range: 0 to 400Hz	✕	0.00	Sec
b126	Brake release current	Set range: 0~200% of inverter rated current	✕	(rated current)	A
b127	Braking freq. setting	Set range: 0 to 400Hz	✕	0.00	Hz
b130	Deceleration overvoltage suppression enable	00…Disabled 01…Enabled 02…Enabled with accel.	✕	00	–
b131	Decel. overvolt. suppress level	DC bus voltage of suppression. Range is: 200V class…330 to 395 400V class…660 to 790	✕	380 /760	V
b132	Decel. overvolt. suppress const.	Accel. rate when b130=02. Set range: 0.10 ~ 30.00 sec.	✕	1.00	sec

"b" Function			Run Mode Edit	Defaults	
Func. Code	Name	Description		Initial data	Units
b133	Decel. overvolt. suppress proportional gain	Proportional gain when b130=01. Range is: 0.00 to 5.00	✓	0.20	–
b134	Decel. overvolt. suppress integral time	Integration time when b130=01. Range is: 0.00 to 150.0	✓	1.0	sec
b145	GS input mode	Two option codes: 00…No trip (Hardware shutoff only) 01…Trip	✗	00	-
b150	Display ex.operator connected	When an external operator is connected via RS-422 port, the built-in display is locked and shows only one "d" parameter configured in: d001 ~ d030	✗	001	–
b160	1st parameter of Dual Monitor	Set any two "d" parameters in b160 and b161, then they can be monitored in d050. The two parameters are switched by up/down keys. Set range: d001 ~ d030	✗	001	–
b161	2nd parameter of Dual Monitor		✗	002	–
b163	Frequency set in monitoring	Two option codes: 00…Freq. set disabled 01…Freq. set enabled	✓	00	-
b164	Automatic return to the initial display	10 min. after the last key operation, display returns to the initial parameter set by b038. Two option codes: 00…Disable 01…Enable	✓	00	-
b165	Ex. operator com. loss action	Five option codes: 00…Trip 01…Trip after deceleration to a stop 02…Ignore 03…Coasting (FRS) 04…Decelerates to a stop	✓	02	-
b166	Data Read/Write select	00… Read/Write OK 01… Protected	✗	00	-
b171	Inverter mode selection	Three option codes: 00…No function 01…Std. IM (Induction Motor) 03…PM(Permanent Magnet Motor)	✗	00	-
b180	Initialization trigger (*)	This is to perform initialization by parameter input with b084, b085 and b094. Two option codes: 00…Initialization disable 01…Perform initialization	✗	00	-
b190	Password Settings A	0000(Invalid Password) 0001-FFFF(Password)	✗	0000	-
b191	Password authentication A	0000-FFFF	✗	0000	-
b192	Password Settings B	0000(Invalid Password) 0001-FFFF(Password)	✗	0000	-
b193	Password authentication B	0000-FFFF	✗	0000	-

Intelligent Terminal Functions

"C" Function			Run Mode Edit	Defaults	
Func. Code	Name	Description		Initial data	Units
C001	Input [1] function	Select input terminal [1] function, 68 options (see next section)	✕	00 [FW]	–
C002	Input [2] function	Select input terminal [2] function, 68 options (see next section)	✕	01 [RV]	–
C003	Input [3] function **[GS1 assignable]**	Select input terminal [3] function, 68 options (see next section)	✕	02 [CF1]	–
C004	Input [4] function **[GS2 assignable]**	Select input terminal [4] function, 68 options (see next section)	✕	03 [CF2]	–
C005	Input [5] function **[PTC assignable]**	Select input terminal [5] function, 68 options (see next section)	✕	09 [2CH]	–
C006	Input [6] function	Select input terminal [6] function, 68 options (see next section)	✕	18 [RS]	–
C007	Input [7] function	Select input terminal [7] function, 68 options (see next section)	✕	13 [USP]	–
C011	Input [1] active state	Select logic conversion, two option codes: 00…normally open [NO] 01…normally closed [NC]	✕	00	–
C012	Input [2] active state		✕	00	–
C013	Input [3] active state		✕	00	–
C014	Input [4] active state		✕	00	–
C015	Input [5] active state		✕	00	–
C016	Input [6] active state		✕	00	–
C017	Input [7] active state		✕	00	–
C021	Output [11] function **[EDM assignable]**	48 programmable functions available for logic (discrete) outputs (see next section)	✕	01 [FA1]	–
C022	Output [12] function		✕	00 [RUN]	–
C026	Alarm relay function	48 programmable functions available for logic (discrete) outputs (see next section)	✕	05 [AL]	–
C027	[EO] terminal selection (Pulse/PWM output)	13 programmable functions: 00…Output frequency (PWM) 01…Output current (PWM) 02…Output torque (PWM) 03…Output frequency (Pulse train) 04…Output voltage (PWM) 05…Input power (PWM) 06…Electronic thermal load ratio (PWM) 07…LAD frequency (PWM) 08…Output current (Pulse train) 10…Heat sink temperature (PWM) 12…General output (PWM) 15…Pulse train input monitor 16…Option(PWM)	✕	07	–

"C" Function			Run Mode Edit	Defaults	
Func. Code	Name	Description		Initial data	Units
C028	[AM] terminal selection (Analog voltage output 0...10V)	11 programmable functions: 00…Output frequency 01…Output current 02…Output torque 04…Output voltage 05…Input power 06…Electronic thermal load ratio 07…LAD frequency 10…Heat sink temperature 11…Output torque (with code) 13…General output 16…Option	✗	07 [LAD]	–
C030	Digital current monitor reference value	Current with digital current monitor output at 1,440Hz Range is 20%~200% of rated current	✓	Rated current	A
C031	Output [11] active state	Select logic conversion, two option codes: 00…normally open [NO] 01…normally closed [NC]	✗	00	–
C032	Output [12] active state		✗	00	-
C036	Alarm relay active state		✗	01	–
C038	Output mode of low current detection	Two option codes: 00…During acceleration, deceleration and constant speed 01…During constant speed only	✗	01	–
C039	Low current detection level	Set the level of low load detection, range is 0.0 to 2.0*inverter rated current	✗	INV rated current	A
C040	Output mode of overload warning	Two option codes: 00…During accel., decel. and constant speed 01…During constant speed only	✗	01	–
C041	Overload warning level	Sets the overload warning signal level between 0% and 200% (from 0 to two time the rated current of the inverter)	✗	Rated current x 1.15	A
C241	Overload warning level, 2nd motor	Sets the overload warning signal level between 0% and 200% (from 0 to two time the rated current of the inverter)	✗	Rated current x 1.15	A
C042	Frequency arrival setting for acceleration	Sets the frequency arrival setting threshold for the output frequency during acceleration, range is 0.0 to 400.0 Hz	✗	0.0	Hz
C043	Frequency arrival setting for deceleration	Sets the frequency arrival setting threshold for the output frequency during deceleration, range is 0.0 to 400.0 Hz	✗	0.0	Hz
C044	PID deviation level	Sets the allowable PID loop error magnitude (absolute value), SP-PV, range is 0.0 to 100%	✗	3.0	%
C045	Frequency arrival setting 2 for acceleration	Set range is 0.0 to 400.0 Hz	✗	0.00	Hz
C046	Frequency arrival setting 2 for deceleration	Set range is 0.0 to 400.0 Hz	✗	0.00	Hz

"C" Function			Run Mode Edit	Defaults	
Func. Code	Name	Description		Initial data	Units
C047	Pulse train input/output scale conversion	If EO terminal is configured as pulse train input (C027=15), scale conversion is set in C047. Pulse-out = Pulse-in × (C047) Set range is 0.01 to 99.99	✓	1.00	
C052	PID FBV output high limit	When the PV exceeds this value, the PID loop turns OFF the PID second stage output, range is 0.0 to 100%	✗	100.0	%
C053	PID FBV output low limit	When the PV goes below this value, the PID loop turns ON the PID second stage output, range is 0.0 to 100%	✗	0.0	%
C054	Over-torque/under-torque selection	Two option codes: 00…Over-torque 01…Under-torque	✗	00	-
C055	Over/under-torque level (Forward powering mode)	Set range is 0 to 200%	✗	100.	%
C056	Over/under-torque level (Reverse regen. mode)	Set range is 0 to 200%	✗	100.	%
C057	Over/under-torque level (Reverse powering mode)	Set range is 0 to 200%	✗	100.	%
C058	Over/under-torque level (Forward regen. mode)	Set range is 0 to 200%	✗	100.	%
C059	Signal output mode of Over/under-torque	Two option codes: 00…During accel., decel. and constant speed 01…During constant speed only	✗	01	-
C061	Electronic thermal warning level	Set range is 0 to 100% Setting 0 means disabled.	✗	90	%
C063	Zero speed detection level	Set range is 0.0 to 100.0Hz	✗	0.00	Hz
C064	Heat sink overheat warning	Set range is 0 to 110 °C	✗	100.	°C
C071	Communication speed	Eight option codes: 03…2,400 bps 04…4,800 bps 05…9,600 bps 06…19,200 bps 07…38,400 bps 08…57,600 bps 09…76,800 bps 10…115,200 bps	✗	05	baud
C072	Modbus address	Set the address of the inverter on the network. Range is 1 to 247	✗	1.	–
C074	Communication parity	Three option codes: 00…No parity 01…Even parity 02…Odd parity	✗	00	–
C075	Communication stop bit	Two option codes: 1…1 bit 2…2 bit	✗	1	bit

"C" Function			Run Mode Edit	Defaults	
Func. Code	Name	Description		Initial data	Units
C076	Communication error select	Selects inverter response to communications error. Five options: 00…Trip 01…Decelerate to a stop and trip 02…Disable 03…Free run stop (coasting) 04…Decelerates to a stop	✗	02	–
C077	Communication error time-out	Sets the communications watchdog timer period. Range is 0.00 to 99.99 sec 0.0 = disabled	✗	0.00	sec.
C078	Communication wait time	Time the inverter waits after receiving a message before it transmits. Range is 0. to 1000. ms	✗	0.	msec.
C081	O input span calibration	Scale factor between the external frequency command on terminals L–O (voltage input) and the frequency output, range is 0.0 to 200%	✓	100.0	%
C082	OI input span calibration	Scale factor between the external frequency command on terminals L–OI (voltage input) and the frequency output, range is 0.0 to 200%	✓	100.0	%
C085	Thermistor input (PTC) span calibration	Scale factor of PTC input. Range is 0.0 to 200%	✓	100.0	%
C091	Debug mode enable *	Displays debug parameters. Two option codes: 00…Disable 01…Enable **<Do not set>** (for factory use)	✓	00	–
C096	Communication selection	00…Modbus-RTU 01… EzCOM 02… EzCOM<administrator>	✗	00	–
C098	EzCOM start adr. of master	01-08	✗	01	–
C099	EzCOM end adr. of master	01-08	✗	01	–
C100	EzCOM starting trigger	00… Input terminal 01… Always	✗	00	–
C101	Up/Down memory mode selection	Controls speed setpoint for the inverter after power cycle. Two option codes: 00…Clear last frequency (return to default frequency F001) 01…Keep last frequency adjusted by UP/DWN	✗	00	–

"C" Function			Run Mode Edit	Defaults	
Func. Code	Name	Description		Initial data	Units
C 102	Reset selection	Determines response to Reset input [RS]. Four option codes: 00…Cancel trip state at input signal ON transition, stops inverter if in Run Mode 01…Cancel trip state at signal OFF transition, stops inverter if in Run Mode 02…Cancel trip state at input ON transition, no effect if in Run Mode 03…Clear the memories only related to trip status	✗	00	–
C 103	Restart mode after reset	Determines the restart mode after reset is given, three option codes: 00…Start with 0 Hz 01…Start with freq. matching 02…Start with active freq. matching	✗	00	-
C 104	UP/DWN clear mode	Freq. set value when UDC signal is given to the input terminal, two option codes: 00…0 Hz 01…Original setting (in the EEPROM memory at power on)	✗	00	-
C 105	EO gain adjustment	Set range is 50 to 200%	✓	100.	%
C 106	AM gain adjustment	Set range is 50 to 200%	✓	100.	%
C 109	AM bias adjustment	Set range is 0 to 100%	✓	0.	%
C 111	Overload warning level 2	Sets the overload warning signal level between 0% and 200% (from 0 to two time the rated current of the inverter)	✓	Rated current x 1.15	A
C 130	Output [11] on delay	Set range is 0.0 to 100.0 sec.	✗	0.0	Sec.
C 131	Output [11] off delay		✗	0.0	Sec.
C 132	Output [12] on delay	Set range is 0.0 to 100.0 sec.	✗	0.0	Sec.
C 133	Output [12] off delay		✗	0.0	Sec.
C 140	Relay output on delay	Set range is 0.0 to 100.0 sec.	✗	0.0	Sec.
C 141	Relay output off delay		✗	0.0	Sec.
C 142	Logic output 1 operand A	All the programmable functions available for logic (discrete) outputs except LOG1 to LOG3, OPO, no	✗	00	–
C 143	Logic output 1 operand B		✗	00	–
C 144	Logic output 1 operator	Applies a logic function to calculate [LOG] output state, Three options: 00…[LOG] = A AND B 01…[LOG] = A OR B 02…[LOG] = A XOR B	✗	00	–
C 145	Logic output 2 operand A	All the programmable functions available for logic (discrete) outputs except LOG1 to LOG3, OPO, no	✗	00	–
C 146	Logic output 2 operand B		✗	00	–

"C" Function			Run Mode Edit	Defaults	
Func. Code	Name	Description		Initial data	Units
C 147	Logic output 2 operator	Applies a logic function to calculate [LOG] output state, Three options: 00…[LOG] = A AND B 01…[LOG] = A OR B 02…[LOG] = A XOR B	✕	00	–
C 148	Logic output 3 operand A	All the programmable functions available for logic (discrete) outputs except LOG1 to LOG3, OPO, no	✕	00	–
C 149	Logic output 3 operand B		✕	01	–
C 150	Logic output 3 operator	Applies a logic function to calculate [LOG] output state, Three options: 00…[LOG] = A AND B 01…[LOG] = A OR B 02…[LOG] = A XOR B	✕	00	–
C 160	Input [1] response time	Sets response time of each input terminal, set range: 0 (x 2 [ms]) to 200 (x 2 [ms]) (0 to 400 [ms])	✕	1.	–
C 161	Input [2] response time		✕	1.	–
C 162	Input [3] response time		✕	1.	–
C 163	Input [4] response time		✕	1.	–
C 164	Input [5] response time		✕	1.	–
C 165	Input [6] response time		✕	1.	–
C 166	Input [7] response time		✕	1.	–
C 169	Multistage speed/position determination time	Set range is 0. to 200. (x 10ms)	✕	0.	ms

Input Function Summary Table – This table shows all thirty-one intelligent input functions at a glance. Detailed description of these functions, related parameters and settings, and example wiring diagrams are in "Using Intelligent Input Terminals" on page 4-8.

Input Function Summary Table				
Option Code	Terminal Symbol	Function Name	Description	
00	FW	FORWARD Run/Stop	ON	Inverter is in Run Mode, motor runs forward
			OFF	Inverter is in Stop Mode, motor stops
01	RV	Reverse Run/Stop	ON	Inverter is in Run Mode, motor runs reverse
			OFF	Inverter is in Stop Mode, motor stops
02	CF1 *1	Multi-speed Select, Bit 0 (LSB)	ON	Binary encoded speed select, Bit 0, logical 1
			OFF	Binary encoded speed select, Bit 0, logical 0
03	CF2	Multi-speed Select, Bit 1	ON	Binary encoded speed select, Bit 1, logical 1
			OFF	Binary encoded speed select, Bit 1, logical 0
04	CF3	Multi-speed Select, Bit 2	ON	Binary encoded speed select, Bit 2, logical 1
			OFF	Binary encoded speed select, Bit 2, logical 0
05	CF4	Multi-speed Select, Bit 3 (MSB)	ON	Binary encoded speed select, Bit 3, logical 1
			OFF	Binary encoded speed select, Bit 3, logical 0
06	JG	Jogging	ON	Inverter is in Run Mode, output to motor runs at jog parameter frequency
			OFF	Inverter is in Stop Mode
07	DB	External DC braking	ON	DC braking will be applied during deceleration
			OFF	DC braking will not be applied
08	SET	Set (select) 2nd Motor Data	ON	The inverter uses 2nd motor parameters for generating frequency output to motor
			OFF	The inverter uses 1st (main) motor parameters for generating frequency output to motor

09	2CH	2-stage Acceleration and Deceleration	ON	Frequency output uses 2nd-stage acceleration and deceleration values
			OFF	Frequency output uses standard acceleration and deceleration values
11	FRS	Free-run Stop	ON	Causes output to turn OFF, allowing motor to free run (coast) to stop
			OFF	Output operates normally, so controlled deceleration stop motor
12	EXT	External Trip	ON	When assigned input transitions OFF to ON, inverter latches trip event and displays E 12
			OFF	No trip event for ON to OFF, any recorded trip events remain in history until reset
13	USP	Unattended Start Protection	ON	On powerup, the inverter will not resume a Run command (mostly used in the US)
			OFF	On powerup, the inverter will resume a Run command that was active before power loss
14	CS	Commercial power source switchover	ON	Motor can be driven by commercial power
			OFF	Motor is driven via the inverter
15	SFT	Software Lock	ON	The keypad and remote programming devices are prevented from changing parameters
			OFF	The parameters may be edited and stored
16	AT	Analog Input Voltage/Current Select	ON	Refer to “Analog Input Settings” on page 3-13.
			OFF	
18	RS	Reset Inverter	ON	The trip condition is reset, the motor output is turned OFF, and powerup reset is asserted
			OFF	Normal power-ON operation
19	PTC	PTC thermistor Thermal Protection (C005 only)	ANLG	When a thermistor is connected to terminal [5] and [L], the inverter checks for over-temperature and will cause trip event and turn OFF output to motor
			OPEN	A disconnect of the thermistor causes a trip event, and the inverter turns OFF the motor

Input Function Summary Table				
Option Code	**Terminal Symbol**	**Function Name**	**Description**	
20	STA	Start (3-wire interface)	ON	Starts the motor rotation
			OFF	No change to present motor status
21	STP	Stop (3-wire interface)	ON	Stops the motor rotation
			OFF	No change to present motor status
22	F/R	FWD, REV (3-wire interface)	ON	Selects the direction of motor rotation: ON = FWD. While the motor is rotating, a change of F/R will start a deceleration, followed by a change in direction
			OFF	Selects the direction of motor rotation: OFF = REV. While the motor is rotating, a change of F/R will start a deceleration, followed by a change in direction
23	PID	PID Disable	ON	Temporarily disables PID loop control. Inverter output turns OFF as long as PID Enable is active (A071=01)
			OFF	Has no effect on PID loop operation, which operates normally if PID Enable is active (A071=01)
24	PIDC	PID Reset	ON	Resets the PID loop controller. The main consequence is that the integrator sum is forced to zero
			OFF	No effect on PID controller
27	UP	Remote Control UP Function (motorized speed pot.)	ON	Accelerates (increases output frequency) motor from current frequency
			OFF	Output to motor operates normally

Input Function Summary Table				
Option Code	**Terminal Symbol**	**Function Name**	**Description**	
28	DWN	Remote Control Down Function (motorized speed pot.)	ON	Decelerates (decreases output frequency) motor from current frequency
			OFF	Output to motor operates normally
29	UDC	Remote Control Data Clearing	ON	Clears the UP/DWN frequency memory by forcing it to equal the set frequency parameter F001. Setting C101 must be set=00 to enable this function to work
			OFF	UP/DWN frequency memory is not changed
31	OPE	Operator Control	ON	Forces the source of the output frequency setting A001 and the source of the Run command A002 to be from the digital operator
			OFF	Source of output frequency set by A001 and source of Run command set by A002 is used
32	SF1	Multi-speed Select, Bit operation Bit 1	ON	Bit encoded speed select, Bit 1, logical 1
			OFF	Bit encoded speed select, Bit 1, logical 0
33	SF2	Multi-speed Select, Bit operation Bit 2	ON	Bit encoded speed select, Bit 2, logical 1
			OFF	Bit encoded speed select, Bit 2, logical 0
34	SF3	Multi-speed Select, Bit operation Bit 3	ON	Bit encoded speed select, Bit 3, logical 1
			OFF	Bit encoded speed select, Bit 3, logical 0
35	SF4	Multi-speed Select, Bit operation Bit 4	ON	Bit encoded speed select, Bit 4, logical 1
			OFF	Bit encoded speed select, Bit 4, logical 0
36	SF5	Multi-speed Select, Bit operation Bit 5	ON	Bit encoded speed select, Bit 5, logical 1
			OFF	Bit encoded speed select, Bit 5, logical 0
37	SF6	Multi-speed Select, Bit operation Bit 6	ON	Bit encoded speed select, Bit 6, logical 1
			OFF	Bit encoded speed select, Bit 6, logical 0
38	SF7	Multi-speed Select, Bit operation Bit 7	ON	Bit encoded speed select, Bit 7, logical 1
			OFF	Bit encoded speed select, Bit 7, logical 0
39	OLR	Overload Restriction Source Changeover	ON	Perform overload restriction
			OFF	Normal operation
40	TL	Torque Limit Selection	ON	Setting of b040 is enabled
			OFF	Max. torque is limited with 200%
41	TRQ1	Torque limit switch 1	ON	Torque limit related parameters of Powering/regen, and FW/RV modes are selected by the combinations of these inputs.
			OFF	
42	TRQ2	Torque limit switch 2	ON	
			OFF	

Input Function Summary Table				
Option Code	**Terminal Symbol**	**Function Name**	**Description**	
44	BOK	Brake confirmation	ON	Brake wait time (b124) is valid
			OFF	Brake wait time (b124) is not valid
46	LAC	LAD cancellation	ON	Set ramp times are ignored. Inverter output immediately follows the freq. command.
			OFF	Accel. and/or decel. is according to the set ramp time
47	PCLR	Pulse counter clear	ON	Clear the position deviation data
			OFF	Maintain the position deviation data
50	ADD	ADD frequency enable	ON	Adds the A145 (add frequency) value to the output frequency
			OFF	Does not add the A145 value to the output frequency
51	F-TM	Force Terminal Mode	ON	Force inverter to use input terminals for output frequency and Run command sources
			OFF	Source of output frequency set by A001 and source of Run command set by A002 is used

Input Function Summary Table				
Option Code	**Terminal Symbol**	**Function Name**	**Description**	
52	ATR	Enable torque command input	ON	Torque control command input is enabled
			OFF	Torque control command input is disabled
53	KHC	Clear watt-hour data	ON	Clear watt-hour data
			OFF	No action
56	MI1	General purpose input (1)	ON	General purpose input (1) is made ON under EzSQ
			OFF	General purpose input (1) is made OFF under EzSQ
57	MI2	General purpose input (2)	ON	General purpose input (2) is made ON under EzSQ
			OFF	General purpose input (2) is made OFF under EzSQ
58	MI3	General purpose input (3)	ON	General purpose input (3) is made ON under EzSQ
			OFF	General purpose input (3) is made OFF under EzSQ
59	MI4	General purpose input (4)	ON	General purpose input (4) is made ON under EzSQ
			OFF	General purpose input (4) is made OFF under EzSQ
60	MI5	General purpose input (5)	ON	General purpose input (5) is made ON under EzSQ
			OFF	General purpose input (5) is made OFF under EzSQ
61	MI6	General purpose input (6)	ON	General purpose input (6) is made ON under EzSQ
			OFF	General purpose input (6) is made OFF under EzSQ
62	MI7	General purpose input (7)	ON	General purpose input (7) is made ON under EzSQ
			OFF	General purpose input (7) is made OFF under EzSQ
65	AHD	Analog command hold	ON	Analog command is held
			OFF	Analog command is not held
66	CP1	Multistage-position switch (1)	ON	Multistage position commands are set according to the combination of these switches.
			OFF	
67	CP2	Multistage-position switch (2)	ON	
			OFF	
68	CP3	Multistage-position switch (3)	ON	
			OFF	
69	ORL	Limit signal of homing	ON	Limit signal of homing is ON
			OFF	Limit signal of homing is OFF
70	ORG	Trigger signal of homing	ON	Starts homing operation
			OFF	No action
73	SPD	Speed/position changeover	ON	Speed control mode
			OFF	Position control mode

Input Function Summary Table				
Option Code	**Terminal Symbol**	**Function Name**	**Description**	
77	GS1 *	GS1 input	ON	EN60204-1 related signals: Signal input of “Safe torque off” function.
			OFF	
78	GS2 *	GS2 input	ON	
			OFF	
81	485	Start EzCOM	ON	Starts EzCOM
			OFF	No execution
82	PRG	Executing EzSQ program	ON	Executing EzSQ program
			OFF	No execution
83	HLD	Retain output frequency	ON	Retain the current output frequency
			OFF	No retention
84	ROK	Permission of Run command	ON	Run command permitted
			OFF	Run command is not permitted
85	EB	Rotation direction detection (C007 only)	ON	Forward rotation
			OFF	Reverse rotation
86	DISP	Display limitation	ON	Only a parameter configured in b038 is shown
			OFF	All the monitors can be shown
255	no	No function	ON	(input ignored)
			OFF	(input ignored)

Output Function Summary Table – This table shows all functions for the logical outputs (terminals [11], [12] and [AL]) at a glance. Detailed descriptions of these functions, related parameters and settings, and example wiring diagrams are in “Using Intelligent Output Terminals” in chapter 4.

Output Function Summary Table				
Option Code	**Terminal Symbol**	**Function Name**	**Description**	
00	RUN	Run Signal	ON	When the inverter is in Run Mode
			OFF	When the inverter is in Stop Mode
01	FA1	Frequency Arrival Type 1–Constant Speed	ON	When output to motor is at the set frequency
			OFF	When output to motor is OFF, or in any acceleration or deceleration ramp
02	FA2	Frequency Arrival Type 2–Over frequency	ON	When output to motor is at or above the set freq, even if in accel (C042) or decel (C043) ramps
			OFF	When output to motor is OFF, or at a level below the set frequency
03	OL	Overload Advance Notice Signal 1	ON	When output current is more than the set threshold (C041) for the overload signal
			OFF	When output current is less than the set threshold for the deviation signal
04	OD	Output Deviation for PID Control	ON	When PID error is more than the set threshold for the deviation signal
			OFF	When PID error is less than the set threshold for the deviation signal
05	AL	Alarm Signal	ON	When an alarm signal has occurred and has not been cleared
			OFF	When no alarm has occurred since the last cleaning of alarm(s)
06	FA3	Frequency Arrival Type 3–Set frequency	ON	When output to motor is at the set frequency, during accel (C042) and decel (C043).
			OFF	When output to motor is OFF, or is not at a level of the set frequency
07	OTQ	Over/under Torque Signal	ON	Estimated motor torque exceeds the specified level
			OFF	Estimated motor torque is lower than the specified level
09	UV	Undervoltage	ON	Inverter is in Undervoltage
			OFF	Inverter is not in Undervoltage
10	TRQ	Torque Limited Signal	ON	Torque limit function is executing
			OFF	Torque limit function is not executing
11	RNT	Run Time Expired	ON	Total running time of the inverter exceeds the specified value
			OFF	Total running time of the inverter does not exceed the specified value
12	ONT	Power ON time Expired	ON	Total power ON time of the inverter exceeds the specified value
			OFF	Total power ON time of the inverter does not exceed the specified value
13	THM	Thermal Warning	ON	Accumulated thermal count exceeds the C061 set value
			OFF	Accumulated thermal count does not exceed the C061 set value
19	BRK	Brake Release Signal	ON	Output for brake release
			OFF	No action for brake
20	BER	Brake Error Signal	ON	Brake error has occurred
			OFF	Brake performance is normal
21	ZS	Zero Hz Speed Detection Signal	ON	Output frequency falls below the threshold specified in C063

Output Function Summary Table				
Option Code	**Terminal Symbol**	**Function Name**	**Description**	
			OFF	Output frequency is higher than the threshold specified in C063
22	DSE	Speed Deviation Excessive	ON	Deviation of speed command and actual speed exceeds the specified value P027.
			OFF	Deviation of speed command and actual speed does not exceed the specified value P027.
23	POK	Positioning Completion	ON	Positioning is completed
			OFF	Positioning is not completed
24	FA4	Frequency Arrival Type 4–Over frequency	ON	When output to motor is at or above the set freq., even if in accel (C045) or decel (C046) ramps
			OFF	When output to motor is OFF, or at a level below the set frequency
25	FA5	Frequency Arrival Type 5–Set frequency	ON	When output to motor is at the set frequency, during accel (C045) and decel (C046).
			OFF	When output to motor is OFF, or is not at a level of the set frequency
26	OL2	Overload Advance Notice Signal 2	ON	When output current is more than the set threshold (C111) for the overload signal
			OFF	When output current is less than the set threshold for the deviation signal
27	ODc	Analog Voltage Input Disconnect Detection	ON	When the [O] input value < b070 setting (signal loss detected)
			OFF	When no signal loss is detected
28	OIDc	Analog Current input Disconnect Detection	ON	When the [OI] input value < b071 setting (signal loss detected)
			OFF	When no signal loss is detected
31	FBV	PID Second Stage Output	ON	Transitions to ON when the inverter is in RUN Mode and the PID Process Variable (PV) is less than the Feedback Low Limit (C053)
			OFF	Transitions to OFF when the PID Process Variable (PV) exceeds the PID High Limit (C052), and transitions to OFF when the inverter goes from Run Mode to Stop Mode
32	NDc	Network Disconnect Detection	ON	When the communications watchdog timer (period specified by C077) has time out
			OFF	When the communications watchdog timer is satisfied by regular communications activity
33	LOG1	Logic Output Function 1	ON	When the Boolean operation specified by C143 has a logical “1” result
			OFF	When the Boolean operation specified by C143 has a logical “0” result
34	LOG2	Logic Output Function 2	ON	When the Boolean operation specified by C146 has a logical “1” result
			OFF	When the Boolean operation specified by C146 has a logical “0” result
35	LOG3	Logic Output Function 3	ON	When the Boolean operation specified by C149 has a logical “1” result
			OFF	When the Boolean operation specified by C149 has a logical “0” result
39	WAC	Capacitor Life Warning Signal	ON	Lifetime of internal capacitor has expired.
			OFF	Lifetime of internal capacitor has not expired.
40	WAF	Cooling Fan Warning Signal	ON	Lifetime of cooling fan has expired.

Output Function Summary Table				
Option Code	Terminal Symbol	Function Name	Description	
			OFF	Lifetime of cooling fan has not expired.
41	FR	Starting Contact Signal	ON	Either FW or RV command is given to the inverter
			OFF	No FW or RV command is given to the inverter, or both are given to the inverter
42	OHF	Heat Sink Overheat Warning	ON	Temperature of the heat sink exceeds a specified value (C064)
			OFF	Temperature of the heat sink does not exceed a specified value (C064)
43	LOC	Low load detection	ON	Motor current is less than the specified value (C039)
			OFF	Motor current is not less than the specified value (C039)
44	MO1	General Output 1	ON	General output 1 is ON
			OFF	General output 1 is OFF
45	MO2	General Output 2	ON	General output 2 is ON
			OFF	General output 2 is OFF
46	MO3	General Output 3	ON	General output 3 is ON
			OFF	General output 3 is OFF
50	IRDY	Inverter Ready Signal	ON	Inverter can receive a run command
			OFF	Inverter cannot receive a run command
51	FWR	Forward Rotation	ON	Inverter is driving the motor in forward direction
			OFF	Inverter is not driving the motor in forward direction
52	RVR	Reverse Rotation	ON	Inverter is driving the motor in reverse direction
			OFF	Inverter is not driving the motor in reverse direction
53	MJA	Major Failure Signal	ON	Inverter is tripping with major failure
			OFF	Inverter is normal, or is not tripping with major failure
54	WCO	Window Comparator for Analog Voltage Input	ON	Analog voltage input value is inside of the window comparator
			OFF	Analog voltage input value is outside of the window comparator
55	WCOI	Window Comparator for Analog Current Input	ON	Analog current input value is inside of the window comparator
			OFF	Analog current input value is outside of the window comparator
58	FREF	Frequency Command Source	ON	Frequency command is given from the operator
			OFF	Frequency command is not given from the operator
59	REF	Run Command Source	ON	Run command is given from the operator
			OFF	Run command is not given from the operator
60	SETM	2nd Motor Selection	ON	2nd motor is being selected
			OFF	2nd motor is not being selected
62	EDM	STO (Safe Torque Off) Performance Monitor (Output terminal 11 only)	ON	STO is being performed
			OFF	STO is not being performed
63	OPO	Option card output	ON	(output terminal for option card)
			OFF	(output terminal for option card)
255	no	Not used	ON	-
			OFF	-

Motor Constants Functions

"H" Function			Run Mode Edit	Defaults	
Func. Code	Name	Description		Initial data	Units
H001	Auto-tuning selection	Three option codes: 00…Disabled 01…Enabled with motor stop 02…Enabled with motor rotation	✗	00	-
H002	Motor constant selection	Four option codes: 00…Hitachi standard motor 02…Auto tuned data	✗	00	-
H202	Motor constant selection, 2nd motor		✗	00	-
H003	Motor capacity	Eleven selections: 0.1/0.2/0.4/0.75/1.5/2.2/3.7/ 5.5/7.5/11/15/18.5	✗	Specified by the capacity of each inverter model	kW
H203	Motor capacity, 2nd motor		✗		kW
H004	Motor poles setting	Four selections: 2 / 4 / 6 / 8 / 10	✗	4	poles
H204	Motor poles setting, 2nd motor		✗	4	poles
H005	Motor speed response constant	Set range is 1 to 1000	✓	100.	-
H205	Motor speed response constant, 2nd motor		✓	100.	-
H006	Motor stabilization constant	Motor constant (factory set), range is 0 to 255	✓	100.	–
H206	Motor stabilization constant, 2nd motor		✓	100.	–
H020	Motor constant R1 (Hitachi motor)	0.001~65.535 ohms	✗	Specified by the capacity of each inverter mode	Ohm
H220	Motor constant R1, 2nd motor (Hitachi motor)		✗		Ohm
H021	Motor constant R2 **(Hitachi motor)**	0.001~65.535 ohms	✗		Ohm
H221	Motor constant R2, 2nd motor **(Hitachi motor)**		✗		Ohm
H022	Motor constant L **(Hitachi motor)**	0.01~655.35mH	✗		mH
H222	Motor constant L, 2nd motor **(Hitachi motor)**		✗		mH
H023	Motor constant I0 **(Hitachi motor)**	0.01~655.35A	✗		A
H223	Motor constant I0, 2nd motor **(Hitachi motor)**		✗		A
H024	Motor constant J **(Hitachi motor)**	0.001~9999 kgm^2	✗		kgm^2
H224	Motor constant J, 2nd motor **(Hitachi motor)**		✗		kgm^2
H030	Motor constant R1 **(Auto tuned data)**	0.001~65.535 ohms	✗	Specified by the capacity of each inverter mode	ohm
H230	Motor constant R1, 2nd motor **(Auto tuned data)**		✗		ohm
H031	Motor constant R2 **(Auto tuned data)**	0.001~65.535 ohms	✗		ohm

"H" Function			Run Mode Edit	Defaults	
Func. Code	Name	Description		Initial data	Units
H231	Motor constant R2, 2nd motor **(Auto tuned data)**		✕		ohm
H032	Motor constant L **(Auto tuned data)**	0.01~655.35mH	✕		mH
H232	Motor constant L, 2nd motor **(Auto tuned data)**		✕		mH
H033	Motor constant I0 **(Auto tuned data)**	0.01~655.35A	✕		A
H233	Motor constant I0, 2nd motor **(Auto tuned data)**		✕		A
H034	Motor constant J **(Auto tuned data)**	0.001~9999 kgm^2	✕		kgm^2
H234	Motor constant J, 2nd motor **(Auto tuned data)**		✕		kgm^2
H050	Slip compensation P gain for V/f control with FB	0.00-10.00	✕	0.2	Times
H051	Slip compensation I gain for V/f control with FB	0.-1000.	✕	2.	(s)

PM Motor Constants Functions

"H" Function			Run Mode Edit	Defaults	
Func. Code	Name	Description		Initial data	Units
H102	PM motor code setting	00…Hitachi standard (Use H106-H110 at motor constants) 01…Auto-Tuning (Use H109-H110, H111-H113 at motor constants)	✕	00	-
H103	PM motor capacity	0.1/0.2/0.4/0.55/0.75/1.1/1.5/2.2/3.0/3.7/ 4.0/5.5/7.5/11.0/15.0/18.5	✕	kW dependent	kW
H104	PM motor pole setting	2/4/6/8/10/12/14/16/18/20/22/24/26/28/ 30/32/34/36/38/40/42/44/46/48	✕	kW dependent	Poles
H105	PM Rated Current	(0.00-1.00)✕Rated current of the inverter [A]	✕	kW dependent	A
H106	PM const R(Resistance)	0.001-65.535 [Ω]	✕	kW dependent	Ohm
H107	PM const Ld(d-axis inductance)	0.01-655.35 [mH]	✕	kW dependent	mH
H108	PM const Lq(q-axis inductance)	0.01-655.35 [mH]	✕	kW dependent	mH
H109	PM const Ke(Induction voltage constant)	0.0001-6.5535 [V/(rad/s)]	✕	kW dependent	V/(rad/s)
H110	PM const J(Moment of inertia)	0.001-9999.000 [kgm^2]	✕	kW dependent	kgm^2
H111	PM const R (Resistance, Auto)	0.001-65.535 [Ω]	✕	kW dependent	Ohm

"H" Function			Run Mode Edit	Defaults	
Func. Code	Name	Description		Initial data	Units
H112	PM const Ld(d-axis inductance, Auto)	0.01-655.35 [mH]	✕	kW dependent	mH
H113	PM const Lq(q-axis inductance, Auto)	0.01-655.35 [mH]	✕	kW dependent	mH
H116	PM Speed Response	1-1000 [%]	✕	100	%
H117	PM Starting Current	20.00-100.00 [%]	✕	70.00[%]	%
H118	PM Starting Time	0.01-60.00 [s]	✕	1.00[s]	s
H119	PM Stabilization Constant	0-120 [%]	✕	100[%]	%
H121	PM Minimum Frequency	0.0-25.5 [%]	✓	8.0 [%]	%
H122	PM No-Load Current	0.00-100.00 [%]	✓	10.00 [%]	%
H123	PM Starting Method Select	00… Normal 01… Initial Magnet Position Estimation	✕	0	-
H131	PM Initial Magnet Position Estimation 0V Wait Times	0-255	✕	10	-
H132	PM Initial Magnet Position Estimation Detect Wait Times	0-255	✕	10	-
H133	PM Initial Magnet Position Estimation Detect Times	0-255	✕	30	-
H134	PM Initial Magnet Position Estimation Voltage Gain	0-200	✕	100	-

Expansion Card Functions

"P" parameters will be appeared when the expansion option is connected.

"P" Function			Run Mode Edit	Defaults	
Func. Code	Name	Description		Initial data	Units
P001	Reaction when option card error occurs	Two option codes: 00…Inverter trips 01…Ignores the error (Inverter continues operation)	✗	00	-
P003	[EA] terminal selection	Three option codes: 00…Speed reference (incl. PID) 01…For control with encoder feedback 02…Extended terminal for EzSQ	✗	00	-
P004	Pulse train input mode selection for feedback	Four option codes: 00…Single-phase pulse [EA] 01…2-phase pulse (90° difference) 1 ([EA] and [EB]) 02…2-phase pulse (90° difference) 2 ([EA] and [EB]) 03…Single-phase pulse [EA] and direction signal [EB]	✗	00	-
P011	Encoder pulse setting	Sets the pulse number (ppr) of the encoder, set range is 32~1024 pulses	✗	512.	-
P012	Simple positioning selection	Two option codes: 00…simple positioning deactivated 01…simple positioning activated	✗	00	-
P015	Creep Speed	Set range is start frequency (b082) ~10.00 Hz	✗	5.00	Hz
P026	Over-speed error detection level	Set range is 0~150%	✗	115.0	%
P027	Speed deviation error detection level	Set range is 0~120 Hz	✗	10.00	Hz
P031					
P033	Torque command input selection	Six option codes: 00…Analog voltage input [O] 01…Analog current input [OI] 03…Operator, 06…Option	✗	00	-
P034	Torque command level input	Set range is 0~200%	✓	0.	%
P036	Torque bias mode selection	Five option codes: 00…No bias 01…Operator	✗	00	-
P037	Torque bias value setting	Range is –200~200%	✓	0.	%
P038	Torque bias polar selection	Two option codes: 00…According to the sign 01…According to the rotation direction 05…Option	✗	00	-
P039	Speed limit of Torque control (Forward rotation)	Set range is 0.00~120.00Hz	✓	0.00	Hz
P040	Speed limit of Torque control (Forward rotation)	Set range is 0.00~120.00Hz	✓	0.00	Hz

"P" Function			Run Mode Edit	Defaults	
Func. Code	Name	Description		Initial data	Units
P041	Speed / Torque control switching time	Set range is 0 to 1000 ms	✗	0.	ms
P044	Communication watchdog timer (for option)	Set range is 0.00 to 99.99s	✗	1.00	s
P045	Inverter action on communication error (for option)	00 (tripping), 01 (tripping after decelerating and stopping the motor), 02 (ignoring errors), 03 (stopping the motor after free-running), 04 (decelerating and stopping the motor)	✗	00	-
P046	DeviceNet polled I/O: Output instance number	0-20	✗	1	-
P048	Inverter action on communication idle mode	00 (tripping), 01 (tripping after decelerating and stopping the motor), 02 (ignoring errors), 03 (stopping the motor after free-running), 04 (decelerating and stopping the motor)	✗	00	-
P049	Motor poles setting for RPM	0/2/4/6/8/10/12/14/16/18/20/22/24/26/28/ 30/32/34/36/38/40/42/44/46/48	✗	0	Poles
P055	Pulse train input frequency scale setting	Sets the pulse numbers at max. frequency, set range is 1.0~32.0 kHz	✗	25.0	kHz
P056	Pulse train input frequency filter time constant setting	Set range is 0.01~2.00 sec.	✗	0.10	sec
P057	Pulse train input bias setting	Set range is –100~100 %	✗	0.	%
P058	Limitation of the pulse train input setting	Set range is 0~100 %	✗	100.	%
P060	Multistage position 0	P073 to P072 (Displayed higher 4-digits only)	✓	0	Pulses
P061	Multistage position 1		✓	0	Pulses
P062	Multistage position 2		✓	0	Pulses
P063	Multistage position 3		✓	0	Pulses
P064	Multistage position 4		✓	0	Pulses
P065	Multistage position 5		✓	0	Pulses
P066	Multistage position 6		✓	0	Pulses
P067	Multistage position 7		✓	0	Pulses
P068	Homing mode selection	00…Low speed mode 01…High speed mode	✓	00	-
P069	Homing direction	00…Forward rotation side 01…Reverse rotation side	✓	01	-
P070	Low speed homing freq.	0 to 10Hz	✓	5.00	Hz
P071	High speed homing freq.	0 to 400Hz	✓	5.00	Hz

"P" Function			Run Mode Edit	Defaults	
Func. Code	Name	Description		Initial data	Units
P072	Position range (Forward)	0 to +268435455(Higher 4-digits displayed)	✓	+268435455	Pulses
P073	Position range (Reverse)	–268435455 to 0(Higher 4-digits displayed)	✓	-268435455	Pulses
P075	Positioning mode selection	00…With limitation 01…No limitation (shorter route) P004 is to be set 00 or 01	✗	00	-
P077	Encoder disconnection timeout	0.0 to 10.0 s	✓	1.0	s
P100 ~ P131	EzSQ user parameter U(00) ~ U(31)	Each set range is 0~65535	✓	0.	-
P140	EzCOM number of data	1 to 5	✓	5	-
P141	EzCOM destination 1 adderss	1 to 247	✓	1	-
P142	EzCOM destination 1 register	0000 to FFFF	✓	0000	-
P143	EzCOM source 1 register	0000 to FFFF	✓	0000	-
P144	EzCOM destination 2 adderss	1 to 247	✓	2	-
P145	EzCOM destination 2 register	0000 to FFFF	✓	0000	-
P146	EzCOM source 2 register	0000 to FFFF	✓	0000	-
P147	EzCOM destination 3 adderss	1 to 247	✓	3	-
P148	EzCOM destination 3 register	0000 to FFFF	✓	0000	-
P149	EzCOM source 3 register	0000 to FFFF	✓	0000	-
P150	EzCOM destination 4 adderss	1 to 247	✓	4	-
P151	EzCOM destination 4 register	0000 to FFFF	✓	0000	-
P152	EzCOM source 4 register	0000 to FFFF	✓	0000	-
P153	EzCOM destination 5 adderss	1 to 247	✓	5	-
P154	EzCOM destination 5 register	0000 to FFFF	✓	0000	-
P155	EzCOM source 5 register	0000 to FFFF	✓	0000	-

CE-EMC Installation Guidelines

You are required to satisfy the EMC directive (2004/108/EC) when using an WJ200 inverter in an EU country.

To satisfy the EMC directive and to comply with standard, you need to use a dedicated EMC filter suitable for each model, and follow the guidelines in this section. Following table shows the compliance condition for reference.

Table 1. Condition for the compliance

Model	Cat.	Carrier f	Motor cable
All WJ200 series	C1	2kHz	20m (Shielded)

Table 2. Applicable EMC filter

Input class	Inverter model	Filter model (Schaffner)
1-ph. 200V class	WJ200-001SFE	FS24828-8-07
	WJ200-002SFE	
	WJ200-004SFE	
	WJ200-007SFE	FS24828-27-07
	WJ200-015SFE	
	WJ200-022SFE	
3-ph. 200V class	WJ200-001LFU	FS24829-8-07
	WJ200-002LFU	
	WJ200-004LFU	
	WJ200-007LFU	
	WJ200-015LFU	FS24829-16-07
	WJ200-022LFU	
	WJ200-037LFU	FS24829-25-07
	WJ200-055LFU	FS24829-50-07
	WJ200-075LFU	
	WJ200-110LFU	FS24829-70-07
	WJ200-150LFU	FS24829-75-07
3-ph. 400V class	WJ200-004HFE	FS24830-6-07
	WJ200-007HFE	
	WJ200-015HFE	FS24830-12-07
	WJ200-022HFE	
	WJ200-030HFE	
	WJ200-040HFE	FS24830-15-07
	WJ200-055HFE	FS24830-29-07
	WJ200-075HFE	
	WJ200-110HFE	FS24830-48-07
	WJ200-150HFE	

WJ200-110L and 150H needs to be installed in a metal cabinet and add ferrite core at the input cable to meet category C1. Unless otherwise category C2.

Important notes

1. Input choke or other equipment is required if necessary to comply with EMC directive from the harmonic distortion point of view (IEC 61000-3-2 and 4).
2. If the motor cable length exceeds 20m, use output choke to avoid unexpected problem due to the leakage current from the motor cable (such as malfunction of the thermal relay, vibration of the motor, etc..).
3. As user you must ensure that the HF (high frequency) impedance between adjustable frequency inverter, filter, and ground is as small as possible.
   - Ensure that the connections are metallic and have the largest possible contact

areas (zinc-plated mounting plates).

4. Avoid conductor loops that act like antennas, especially loops that encompass large areas.
   - Avoid unnecessary conductor loops.
   - Avoid parallel arrangement of low-level signal wiring and power-carrying or noise-prone conductors.
5. Use shielded wiring for the motor cable and all analog and digital control lines.
   - Allow the effective shield area of these lines to remain as large as possible; i.e., do not strip away the shield (screen) further away from the cable end than absolutely necessary.
   - With integrated systems (for example, when the adjustable frequency inverter is communicating with some type of supervisory controller or host computer in the same control cabinet and they are connected at the same ground + PE-potential), connect the shields of the control lines to ground + PE (protective earth) at both ends. With distributed systems (for example the communicating supervisory controller or host computer is not in the same control cabinet and there is a distance between the systems), we recommend connecting the shield of the control lines only at the end connecting to the adjustable frequency inverter. If possible, route the other end of the control lines directly to the cable entry section of the supervisory controller or host computer. The shield conductor of the motor cables always must connected to ground + PE at both ends.
   - To achieve a large area contact between shield and ground + PE-potential, use a PG screw with a metallic shell, or use a metallic mounting clip.
   - Use only cable with braided, tinned copper mesh shield (type “CY”) with 85% coverage.
   - The shielding continuity should not be broken at any point in the cable. If the use of reactors, contactors, terminals, or safety switches in the motor output is necessary, the unshielded section should be kept as short as possible.
   - Some motors have a rubber gasket between terminal box and motor housing. Very often, the terminal boxes, and particularly the threads for the metal PG screw connections, are painted. Make sure there is always a good metallic connection between the shielding of the motor cable, the metal PG screw connection, the terminal box, and the motor housing. If necessary, carefully remove paint between conducting surfaces.
6. Take measures to minimize interference that is frequently coupled in through installation cables.
   - Separate interfering cables with 0.25m minimum from cables susceptible to interference. A particularly critical point is laying parallel cables over longer distances. If two cables intersect (one crosses over the other), the interference is smallest if they intersect at an angle of 90°. Cables susceptible to interference should therefore only intersect motor cables, intermediate circuit cables, or the wiring of a rheostat at right angles and never be laid parallel to them over longer distances.
7. Minimize the distance between an interference source and an interference sink (interference- threatened device), thereby decreasing the effect of the emitted interference on the interference sink.
   - You should use only interference-free devices and maintain a minimum distance of 0.25 m from the adjustable frequency inverter.
8. Follow safety measures in the filter installation.
   - If using external EMC filter, ensure that the ground terminal (PE) of the filter is properly connected to the ground terminal of the adjustable frequency inverter. An HF ground connection via metal contact between the housings of the filter and the adjustable frequency inverter, or solely via cable shield, is not permitted as a protective conductor connection. The filter must be solidly and permanently

connected with the ground potential so as to preclude the danger of electric shock upon touching the filter if a fault occurs.

To achieve a protective ground connection for the filter:

- Ground the filter with a conductor of at least 10 mm^2 cross-sectional area.
- Connect a second grounding conductor, using a separate grounding terminal parallel to the protective conductor. (The cross section of each single protective conductor terminal must be sized for the required nominal load.)

Installation for WJ200 series (example of SFE models)

Model LFx (3-ph. 200V class) and HFx (3-ph. 400V class) are the same concept for the installation.

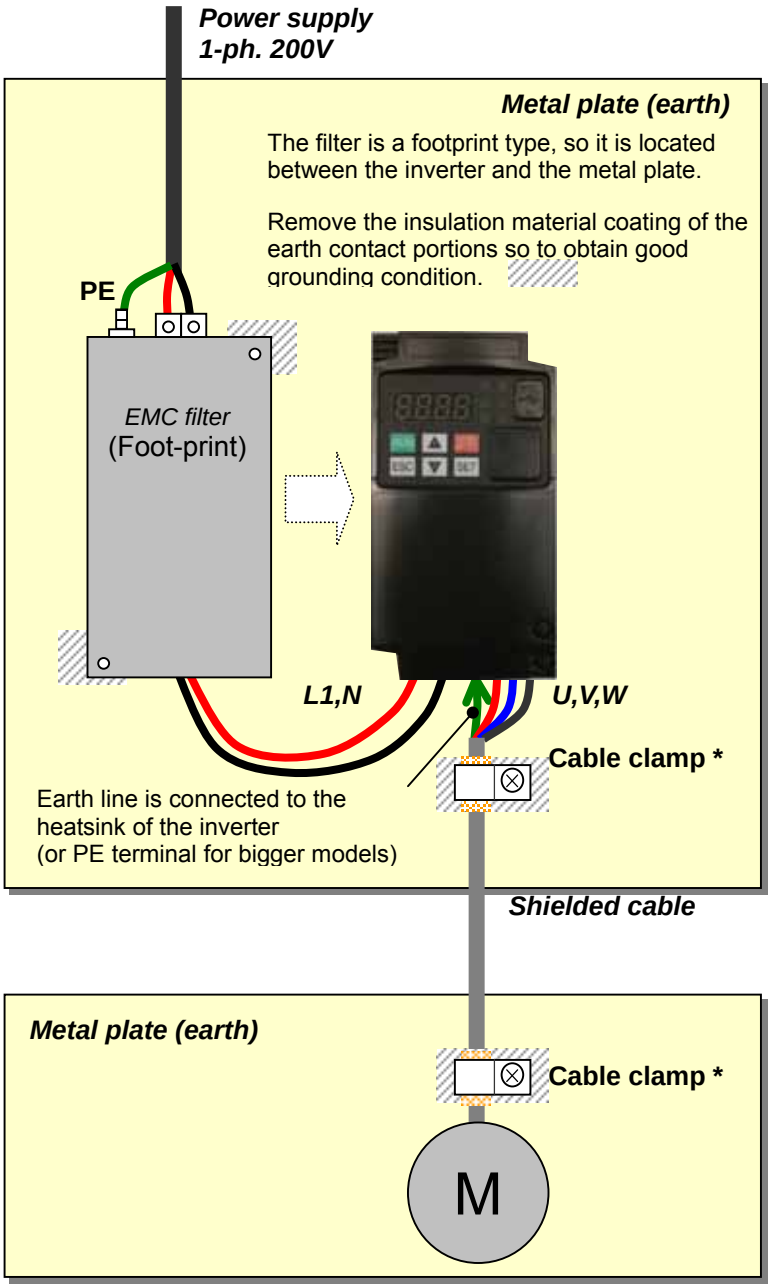

*) Both earth portions of the shielded cable must be connected to the earth point by cable clamps.

Input choke or equipment to reduce harmonic current is necessary for CE marking (IEC 61000-3-2 and IEC61000-3-3) from the harmonic current point of view, even conducted emission and radiated emission passed without the input choke.

Hitachi EMC Recommendations

WARNING: This equipment should be installed, adjusted, and serviced by qualified personal familiar with construction and operation of the equipment and the hazards involved. Failure to observe this precaution could result in bodily injury.

Use the following checklist to ensure the inverter is within proper operating ranges and conditions.

1. The power supply to WJ200 inverters must meet these specifications:

- Voltage fluctuation ±10% or less
- Voltage imbalance ±3% or less
- Frequency variation ±4% or less
- Voltage distortion THD = 10% or less

2. Installation measure:

- Use a filter designed for WJ200 inverter. Refer to the instruction of the applicable external EMC filter.

3. Wiring:

- Shielded wire (screened cable) is required for motor wiring, and the length must be 20 meter or less.
- If the motor cable length exceeds the value shown above, use output choke to avoid unexpected problem due to the leakage current from the motor cable.
- The carrier frequency setting must be 2 kHz to satisfy EMC requirements.
- Separate the power input and motor wiring from the signal/process circuit wiring.

4. Environmental conditions—when using a filter, follow these guidelines:

- Ambient temperature: –10 to 50 °C (Derating is required when the ambient temperature exceeds 40 °C)
- Humidity: 20 to 90% RH (non-condensing)
- Vibration: 5.9 m/sec2 (0.6 G) 10 ~ 55Hz
- Location: 1000 meters or less altitude, indoors (no corrosive gas or dust)

Functional Safety (Certification in Progress)

Introduction

The Gate Suppress function can be utilized to perform a safe stop according to the EN60204-1, stop category 0 (Uncontrolled stop by power removal). It is designed to meet the requirements of the ISO13849-1, PL=d only in a system in which EDM signal is monitored by an “external device monitor”.

Stop Category defined in EN60204-1

Category 0 : Uncontrolled stop by immediate (< 200 ms) shut-down of the power supply to the actuators

Category 1 : Controlled stop by interrupting the power supply to the actuator level if, for example, the hazardous movement has been brought to a standstill (time-delayed shut-down of the power supply).

Category 2 : Controlled stop. The power supply to the drive element is not interrupted. Additional measures to EN 1037 (protection from unexpected restart) are necessary.

How it works

Interrupting the current to GS1 or GS2, for example removing the link between either GS1 or GS2 and PLC or both GS1/GS2 and PLC disables the drive output, i.e. the power supply to the motor is cut by stopping the switching of the output transistors in a safe way. EDM output is activated when GS1 and GS2 are given to the drive.

Always use both inputs to disable the drive. If for any reason only one channel is opened, the drive output is stopped but the EDM output is not activated. In this case the Safe Disable input wiring must be checked.

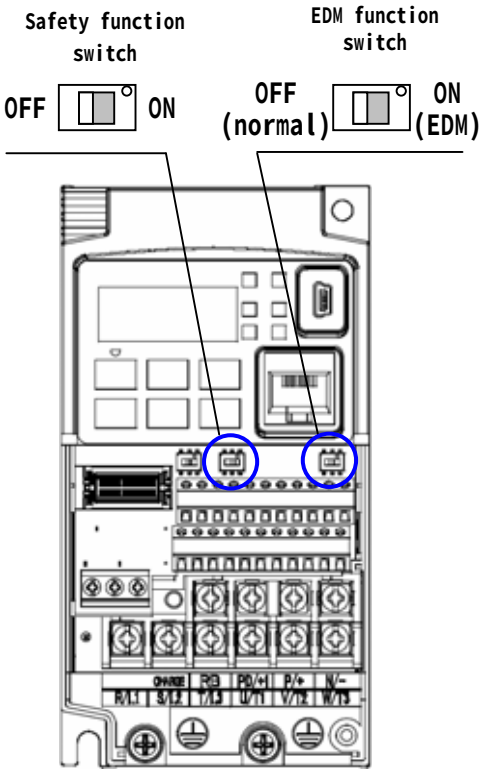

Activation

Turning on the safety switch automatically assign the GS1 input and GS2 input automatically.

To assign EDM (external device monitor) output, please turn the EDM function switch on. EDM output is automatically assigned on intelligent output terminal 11.

(When safety switch or EDM switch is turned off, the intelligent input and output terminal assigned on will be set as "no" function, and contact will remain normally off.)

Always use both inputs to disable the drive. If for any reason only one channel is opened, the drive output is stopped but the EDM output is not activated. In this case the Safe Disable input wiring must be checked.

Installation

According to the safety standard listed above, please install referring to the example. Please be sure to use the both GS1 and GS2, and construct the system that GS1 andGS2 are both turned off when safety input is given to the inverter.

When the Gate Suppress function is utilized, connect the drive to a safety certified interrupting device utilizing EDM output signal to reconfirm both safety inputs GS1 and GS2.

item	Function code	data	description
Input [3] and [4] function	C003	77	GS1: Safety input 1 (note 1)
	C004	78	GS2：Safety input 2 (note 1)
Input [3] and [4] active state	C013	01	NC: Normally Closed (note 1)
	C014	01	NC: Normally Closed (note 1)
Output [11] function	C021	62	EDM：External Device Monitor(note2)
Output [11] active state	C031	00	NO: Normally Open (note 2)
GS input mode	b145	00	Output is shut off by hardware. No trip.
		01	Output is shut off by hardware, and then, trip. (note3) (note4)

Note 1) They are automatically set when safety switch is turned ON, cannot be changed.

Note 2) Those are automatically assigned when EDM switch is turned ON, cannot be changed.

Note 3) Inverter trips with "E37". When competing with external trip (E12), E37 has priority.

Note 4) While the drive is the trip status "E037" and either GS1 or GS2 is activated, on the safety by is not guaranteed.

Wiring example

When the Gate Suppress function is utilized, connect the drive to a safety certified interrupting device utilizing EDM output signal to reconfirm both safety inputs GS1 and GS2.

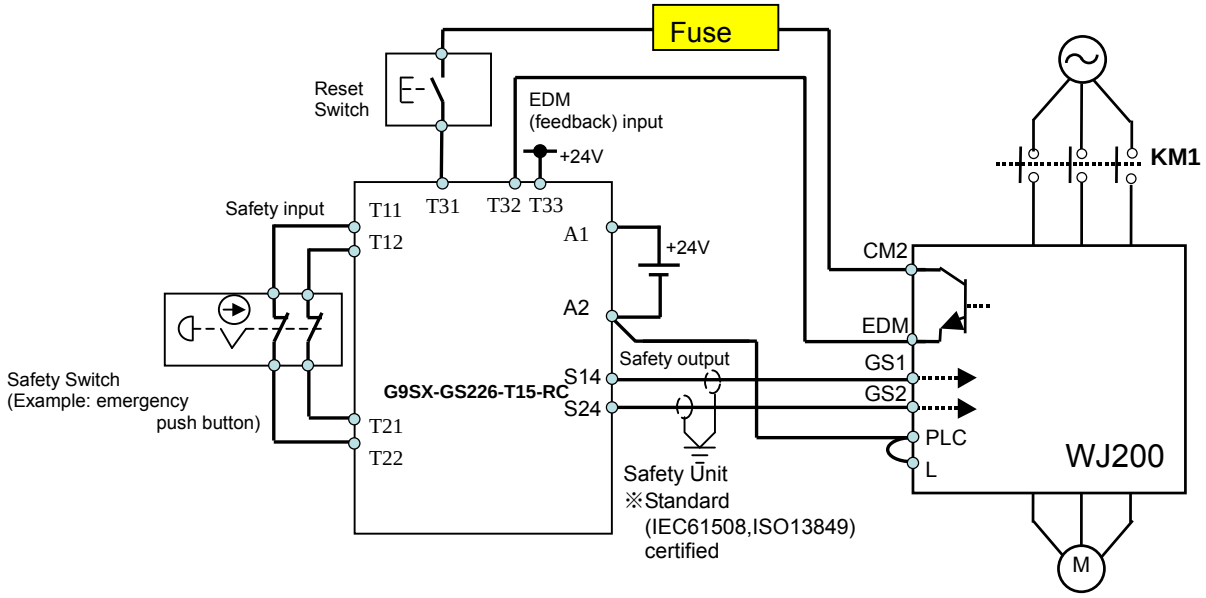

By pressing the emergency stop button, the current to GS1 and GS2 is shut off, and the inverter output is shut off. By this, motor is free-running. This behavior is according to the stop category 0 defined in EN60204.

Note 1: Above is the example to use the intelligent input terminal with source logic. When it is used with sink logic, the wiring is to be modified.

Note 2: The wire for safety relay and emergency input signal are to be shielded coaxial cable for example RS174/U (produced by LAPP) by MIL-C17, or KX2B by NF C 93-550 with diameter 2.9mm with less than 2 meters. Please be sure to ground the shielding.

Note 3: All the inductance related parts such as relay and contactor are required to contain the over-voltage protection circuit.

The arch extinguishing fuse with rated voltage AC250V, rated current 100mA complies to either IEC6127 –2/-3/-4
Example)
SOC EQ series AC250V, 100mA (UL, SEMKO, BSI)
Little 216 series AC250V, 100mA (CCC, UL, CSA, SEMKO, CE, VDE)

As described on page 4-14 of this manual, inverter doesn't block the current flowing into itself when it is not powered. This may cause the closed circuit when two or more inverters are connected to common I/O wiring as shown below to result in unexpected turning the on the input. This may lead to dangerous situation. To avoid this closed circuit, please put the diode (rated:50V/0.1A) in the path as described below.

In case of Source logic

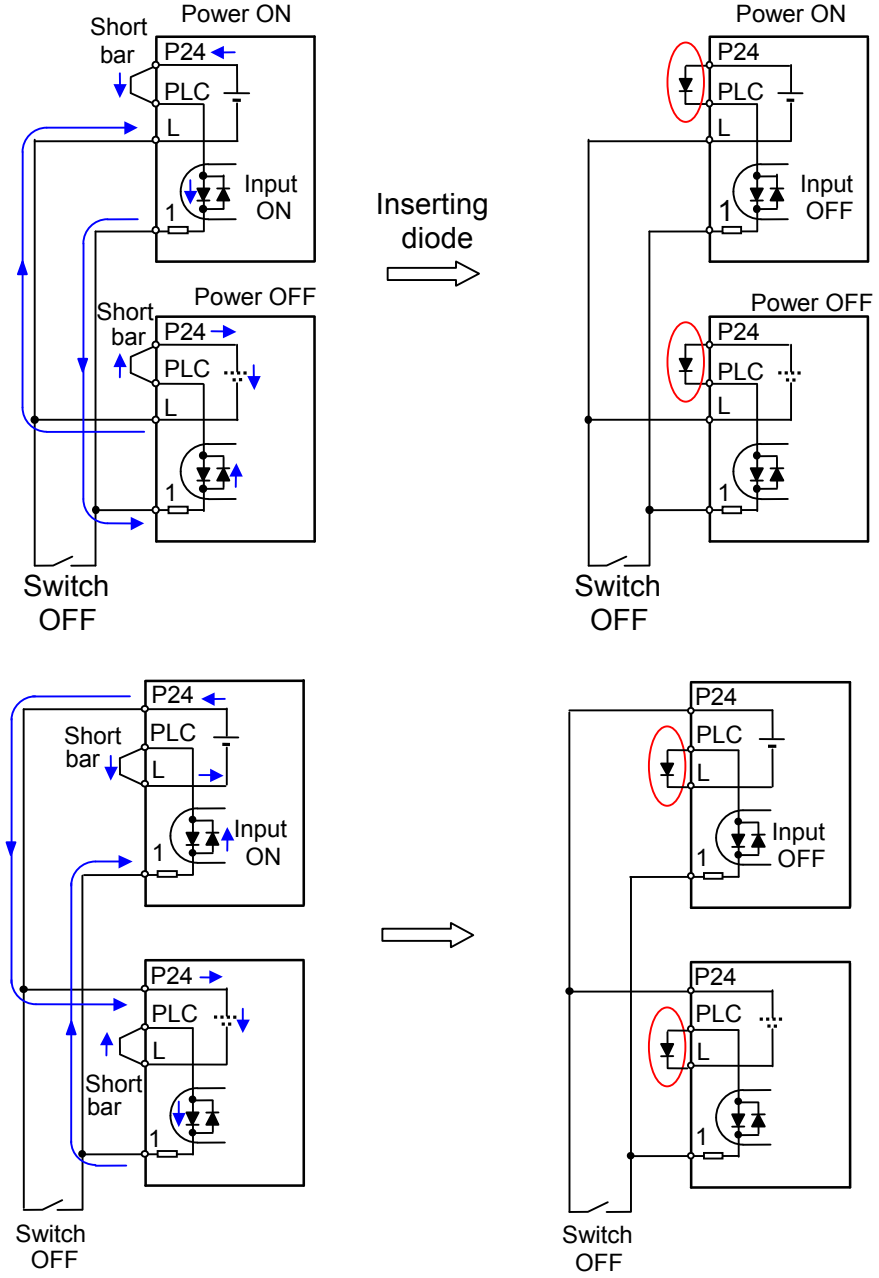

Components to be combined

Followings are the example of the safety devices to be combined.

Series	Model	Norms to comply	Certification date
GS9A	301	ISO13849-2 cat4, SIL3	06.06.2007
G9SX	GS226-T15-RC	IEC61508 SIL1-3	04.11.2004
NE1A	SCPU01-V1	IEC61508 SIL3	27.09.2006

The configuration of and components used in any circuit other than an appropriately pre approved safety module that interfaces with the WJ200 GS1/GS2 and EDM ports MUST be at least equivalent to CAT 3 PLd under ISO 13849-1:2006 in order to be able to claim an overall CAT 3 PLd for the WJ200 and external circuit combination.

The EMI level that the external module has been assessed to must be at least equivalent to that of Appendix E IEC 62061.

Periodical check (proof test)

Proof test is essential to be able to reveal any dangerous undetected failures after a period of time, in this case 1 year. Carrying out this proof test at least one a year is the condition to comply the ISO13849-1 PLd.

- To activate (give current to) GS1 and GS2 simultaneously and separately to see output is allowed and EDM is conducting

Terminal	Status			
GS1	current OFF	current ON	current OFF	current ON
GS2	current OFF	current OFF	current ON	current ON
EDM	conducted	not conducted	Not conducted	not conducted
(output)	forbidden	forbidden	forbidden	Allowed

- To activate (give current to) both GS1 and GS2 to see output is allowed and EDM is not conducting

- To activate (give current to) GS1, not to activate GS2 and see output is forbidden and EDM is not conducting

- To activate (give current to) GS2, not to activate GS1 and see output is forbidden and EDM is not conducting

- To deactivate (interrupt current to) both GS1 and GS2 to see output is forbidden and EDM is conducting

Precautions

1. To assure, that the Safe Disable function appropriately fulfills the safety requirements of the application, a throughout risk assessment for the whole safety system has to be carried out.
2. The Safe Disable function does not cut the power supply to the drive and does not provide electrical isolation. Before any installation or maintenance work is done, the drives power supply must be switched off and place a tag/lock-out.
3. The wiring distance for the Safe Disable inputs should be shorter than 30 m.
4. The time from opening the Safe Disable input until the drive output is switched off is less than 10 ms.